OPERATION MANUAL

MARINE ENGINES

YM

2YM15

3YM20

3YM30AE

en English

YANMAR

California
Proposition 65 Warning

Diesel engine exhaust and some of its constituents are known to the state of California to cause cancer, birth defects, and other reproductive harm.

Disclaimers:

All information, illustrations and specifications in this manual are based on the latest information available at the time of publishing. The illustrations used in this manual are intended as representative reference views only. Moreover, because of our continuous product improvement policy, we may modify information, illustrations and/or specifications to explain and/or exemplify a product, service or maintenance improvement. We reserve the right to make any change at any time without notice. Yanmar and **YANMAR** are registered trademarks of YANMAR CO., LTD. in Japan, the United States and/or other countries.

All Rights Reserved:

No part of this publication may be reproduced or used in any form by any means - graphic, electronic, or mechanical, including photocopying, recording, taping, or information storage and retrieval systems - without the written permission of YANMAR CO., LTD.

Please review and comply with the applicable laws and regulations of the international export control regimes at the territory or country where the product and manual are intended to be imported and used.

OPERATION MANUAL	MODEL	2YM15, 3YM20, 3YM30AE
	CODE	0AYMM-EN0027

All Rights Reserved, Copyright **YANMAR CO., LTD.**

TABLE OF CONTENTS

INTRODUCTION 1
RECORD OF OWNERSHIP 2
SAFETY 3
SAFETY PRECAUTIONS 4
General Information 4
Before You Operate 4
During Operation and Maintenance 4
LOCATION OF SAFETY DECALS 8
PRODUCT OVERVIEW 9
YANMAR YM SERIES FEATURES AND APPLICATIONS 9
New Engine Break-In 10
COMPONENT IDENTIFICATION 11
Right Side (Viewed from Flywheel) - 2YM15 11
Left Side (Viewed from Flywheel) - 2YM15 11
Right Side (Viewed from Flywheel) - 3YM20 12
Left Side (Viewed from Flywheel) -3YM20 12
Right Side (Viewed from Flywheel) - 3YM30AE .. 13
Left Side (Viewed from Flywheel) - 3YM30AE ... 13
NAMEPLATES 14
FUNCTION OF MAJOR COMPONENTS 15
CONTROL EQUIPMENT 16
Instrument Panel 16
Single-Handle Remote Control Head 22
BEFORE YOU OPERATE 23
INTRODUCTION 23
SAFETY PRECAUTIONS 23

DIESEL FUEL 24
Diesel Fuel Specifications 24
Filling the Fuel Tank 27
Bleeding the Fuel System 28
ENGINE OIL 29
Engine Oil Specifications 29
Engine Oil Viscosity 29
Checking the Engine Oil 30
Adding Engine Oil 30
MARINE GEAR OR SAIL DRIVE OIL 31
Marine Gear Oil Specifications 31
Sail Drive Oil Specifications- SD25 31
Checking Marine Gear Oil 31
Adding Marine Gear Oil 31
Checking and Adding Sail Drive Oil 31
ENGINE COOLANT 32
Engine Coolant Specifications 32
Coolant (Closed Cooling System) 32
Checking and Adding Coolant 33
CRANKING THE ENGINE 35
ENGINE OPERATION 37
INTRODUCTION 37
SAFETY PRECAUTIONS 37
STARTING THE ENGINE 39
If the Engine Fails to Start 40
Starting at Low Temperatures 40
After the Engine has Started 41
REMOTE CONTROL HANDLE OPERATION 42
Acceleration and Deceleration 42
Shifting the Engine 42
CAUTIONS DURING OPERATION 43
SHUTTING DOWN THE ENGINE 44
Normal Shutdown 44
Emergency Shutdown 45
CHECKING THE ENGINE AFTER OPERATION 46
PERIODIC MAINTENANCE 47
INTRODUCTION 47
SAFETY PRECAUTIONS 47

PRECAUTIONS 49
The Importance of Periodic Maintenance 49
Performing Periodic Maintenance 49
The Importance of Daily Checks 49
Keep a Log of Engine Hours and Daily Checks 49
Yanmar Replacement Parts 49
Tools Required 49
Ask Your Authorized Yanmar Marine Dealer or Distributor for Help 49
Tightening Fasteners 50
EPA MAINTENANCE REQUIREMENTS 51
EPA Requirements for USA and Other Applicable Countries 51
Conditions to Ensure Compliance with EPA Emission Standards 51
Inspection and Maintenance 51
Installing Sample Port 52
PERIODIC MAINTENANCE SCHEDULE 53
Inspection and Maintenance of Emission-Related Parts 56
PERIODIC MAINTENANCE PROCEDURES 57
Daily Checks 57
After Initial 50 Hours of Operation 58
Every 50 Hours of Operation 63
Every 100 Hours of Operation 65
Every 150 Hours of Operation 65
Every 250 Hours of Operation 66
Every 1000 Hours of Operation 69
TROUBLESHOOTING 73
SAFETY PRECAUTIONS 73
TROUBLESHOOTING AFTER STARTING 73
TROUBLESHOOTING INFORMATION 74
TROUBLESHOOTING CHART 75
LONG-TERM STORAGE 77
PREPARE ENGINE FOR LONG-TERM STORAGE .. 77
DRAIN SEAWATER COOLING SYSTEM 78
SPECIFICATIONS 81
PRINCIPAL ENGINE SPECIFICATIONS 81
2YM15 Engine Specifications 82
3YM20 Engine Specifications 83
3YM30AE Engine Specifications 84
Marine Gear and Sail Drive Specifications 85

TABLE OF CONTENTS

SYSTEM DIAGRAMS 87
PIPING DIAGRAMS 87
WIRING DIAGRAMS 92
WARRANTY USA ONLY 95
YANMAR CO., LTD. LIMITED EMISSION CONTROL SYSTEM WARRANTY - USA ONLY 95
YANMAR EMISSION CONTROL SYSTEM WARRANTY STATEMENT 97
YOUR WARRANTY RIGHTS AND OBLIGATIONS: . 97
Yanmar's warranty coverage: 97
Warranted Parts: 98
Exclusions: 98
Owners Warranty Responsibilities: 99
Customer Assistance: 99
Maintenance Log 100

INTRODUCTION

Welcome to the world of Yanmar Marine! Yanmar Marine offers engines, drive systems and accessories for all types of boats, from runabouts to sailboats, and from cruisers to mega yachts. In marine leisure boating, the worldwide reputation of Yanmar Marine is second to none. We design our engines to respect nature. This means quieter engines, with minimal vibrations, cleaner than ever. All of our engines meet applicable regulations, including emissions, at the time of manufacture.

To help you enjoy your Yanmar YM series engine for many years to come, please follow these recommendations:

- Read and understand this *Operation Manual* before you operate the machine to ensure that you follow safe operating practices and maintenance procedures.
- Keep this *Operation Manual* in a convenient place for easy access.
- If this *Operation Manual* is lost or damaged, order a new one from your authorized Yanmar Marine dealer or distributor.
- Make sure this manual is transferred to subsequent owners. This manual should be considered a permanent part of the engine and remain with it.
- Constant efforts are made to improve the quality and performance of Yanmar products, so some details included in this *Operation Manual* may differ slightly from your engine. If you have any questions about these differences, please consult your authorized Yanmar Marine dealer or distributor.
- The specifications and components (instrument panel, fuel tank, etc.) described in this manual may differ from ones installed on your vessel. Please refer to the manual provided by the manufacturer of these components.
- Refer to the Yanmar Limited Warranty Handbook for a complete warranty description.

RECORD OF OWNERSHIP

Take a few moments to record the information you need when you consult Yanmar for service, parts or documentation.

Engine Model: _____

Engine Serial No.: _____

Date Purchased: _____

Dealer:_____

Dealer Phone:_____

SAFETY

Yanmar considers safety of great importance and recommends that anyone that comes into close contact with its products, such as those who install, operate, maintain or service Yanmar products, exercise care, common sense and comply with the safety information in this manual and on the machine's safety decals. Keep the labels from becoming dirty or torn and replace them if they are lost or damaged. Also, if you need to replace a part that has a label attached to it, make sure you order the new part and label at the same time.

This safety alert symbol appears with most safety statements. It means attention, become alert, your safety is involved! Please read and abide by the message that follows the safety alert symbol.

⚠ DANGER

Indicates a hazardous situation which, if not avoided, *will* result in death or serious injury.

⚠ WARNING

Indicates a hazardous situation which, if not avoided, *could* result in death or serious injury.

⚠ CAUTION

Indicates a hazardous situation which, if not avoided, *could* result in minor or moderate injury.

NOTICE

Indicates a situation which can cause damage to the machine, personal property and / or the environment, or cause the equipment to operate improperly.

SAFETY PRECAUTIONS

General Information

There is no substitute for common sense and careful practices. Improper practices or carelessness can cause burns, cuts, mutilation, asphyxiation, other bodily injury or death. This information contains general safety precautions and guidelines that must be followed to reduce risk to personal safety. Special safety precautions are listed in specific procedures. Read and understand all of the safety precautions before operation or performing repairs or maintenance.

Before You Operate

⚠ DANGER

The safety messages that follow have DANGER level hazards.

Never permit anyone to install or operate the engine without proper training.

Read and understand this *Operation Manual* before you operate or service the engine to ensure that you follow safe operating practices and maintenance procedures.

- **Safety signs and labels are additional reminders for safe operating and maintenance techniques.**
- **Consult authorized Yanmar Marine dealer or distributor for additional training.**

During Operation and Maintenance

⚠ WARNING

The safety messages that follow have WARNING level hazards.

Explosion Hazard

While the engine is running or the battery is charging, hydrogen gas is being produced and can be easily ignited. Keep the area around the battery well-ventilated and keep sparks, open flames and any other form of ignition out of the area.

Fire and Explosion Hazard

Diesel fuel is flammable and explosive under certain conditions.

Never use a shop rag to catch the fuel.

Wipe up all spills immediately.

Never refuel with the engine running.

Fire Hazard

Undersized wiring systems can cause an electrical fire.

Store any containers containing fuel or other flammable products in a well-ventilated area, away from any combustibles or source of ignition.

Store any equipment in a designated area away from moving parts.

Never use the engine compartment for storage.

⚠ WARNING

Sever Hazard

Rotating parts can cause severe injury or death. Never wear jewelry, unbuttoned cuffs, ties or loose-fitting clothing and always tie long hair back when working near moving / rotating parts such as the flywheel or PTO shaft. Keep hands, feet and tools away from all moving parts.

Alcohol and Drug Hazard

Never operate the engine while under the influence of alcohol or drugs, or when feeling ill.

Exposure Hazard

Always wear personal protective equipment including appropriate clothing, gloves, work shoes, and eye and hearing protection as required by the task at hand.

Sudden Movement Hazard

Never operate the engine while wearing a headset to listen to music or radio because it will be difficult to hear the warning signals.

Burn Hazard

Some of the engine surfaces become very hot during operation and shortly after shutdown. Keep hands and other body parts away from hot engine surfaces.

Exhaust Hazard

Never block windows, vents or other means of ventilation if the engine is operating in an enclosed area. All internal combustion engines create carbon monoxide gas during operation and special precautions are required to avoid carbon monoxide poisoning.

⚠ CAUTION

The safety messages that follow have CAUTION level hazards.

Poor Lighting Hazard

Ensure that the work area is adequately illuminated. Always install wire cages on portable safety lamps.

Tool Hazard

Always use tools appropriate for the task at hand and use the correct size tool for loosening or tightening machine parts.

Flying Object Hazard

Always wear eye protection when servicing the engine or when using compressed air or high-pressure water. Dust, flying debris, compressed air, pressurized water or steam may injure your eyes.

Coolant Hazard

Wear eye protection and rubber gloves when you handle engine coolant. If contact with the eyes or skin should occur, flush eyes and wash immediately with clean water.

NOTICE

The safety messages that follow have NOTICE level hazards.

It is important to perform daily checks as listed in the *Operation Manual*. Periodic maintenance prevents unexpected downtime, reduces the number of accidents due to poor engine performance and helps extend the life of the engine.

Consult authorized Yanmar Marine dealer or distributor if you need to operate the engine at high altitudes. At high altitudes the engine will lose power, run rough and produce exhaust gases that exceed the design specifications.

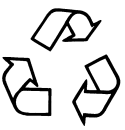

Always be environmentally responsible.

Follow the guidelines of the EPA or other governmental agencies for the proper disposal of hazardous materials such as engine oil, diesel fuel and engine coolant. Consult the local authorities or reclamation facility.

Never dispose of hazardous materials by dumping them into a sewer, on the ground, or into ground water or waterways.

If a Yanmar Marine Engine is installed at an angle that exceeds the specifications stated in the Yanmar Marine *Installation Manuals*, engine oil may enter the combustion chamber causing excessive engine speed, white exhaust smoke and serious engine damage. This applies to engines that run continuously or those that run for short periods of time.

NOTICE

If you have an installation with two or three engines and only one engine is operating, the water pickup (thru-hull) of the non-running engine(s) should be closed. This will prevent water from being forced past the seawater pump and eventually finding its way into the engine. The result of water entering the engine could cause seizure or other serious problems.

If you have an installation with two or three engines, and only one engine is operating, please note that if the propeller shaft thru-hull (stuffing box) is lubricated by engine water pressure and the engines are interconnected, care must be taken that water from the running engine does not enter the exhaust of the non-running engine(s). This water could cause seizure of the non-running engine(s). Consult authorized Yanmar Marine dealer or distributor for a complete explanation of this condition.

If you have an installation with two or three engines, and only one engine is operating, it is important to limit the amount of throttle applied to the running engine. If you observe black smoke or movement of the throttle does not increase engine speed, you are overloading the engine that is running. Immediately throttle back to approximately 2/3 throttle or to a setting where the engine performs normally. Failure to do so may cause the running engine to overheat or cause excess carbon buildup which may shorten the engine's life.

Never turn off the battery switch (if equipped) or short the battery cables during operation. Damage to the electrical system will result.

LOCATION OF SAFETY DECALS

Figure 1, show the location of safety decals on Yanmar YM series marine engines.

YM Engines

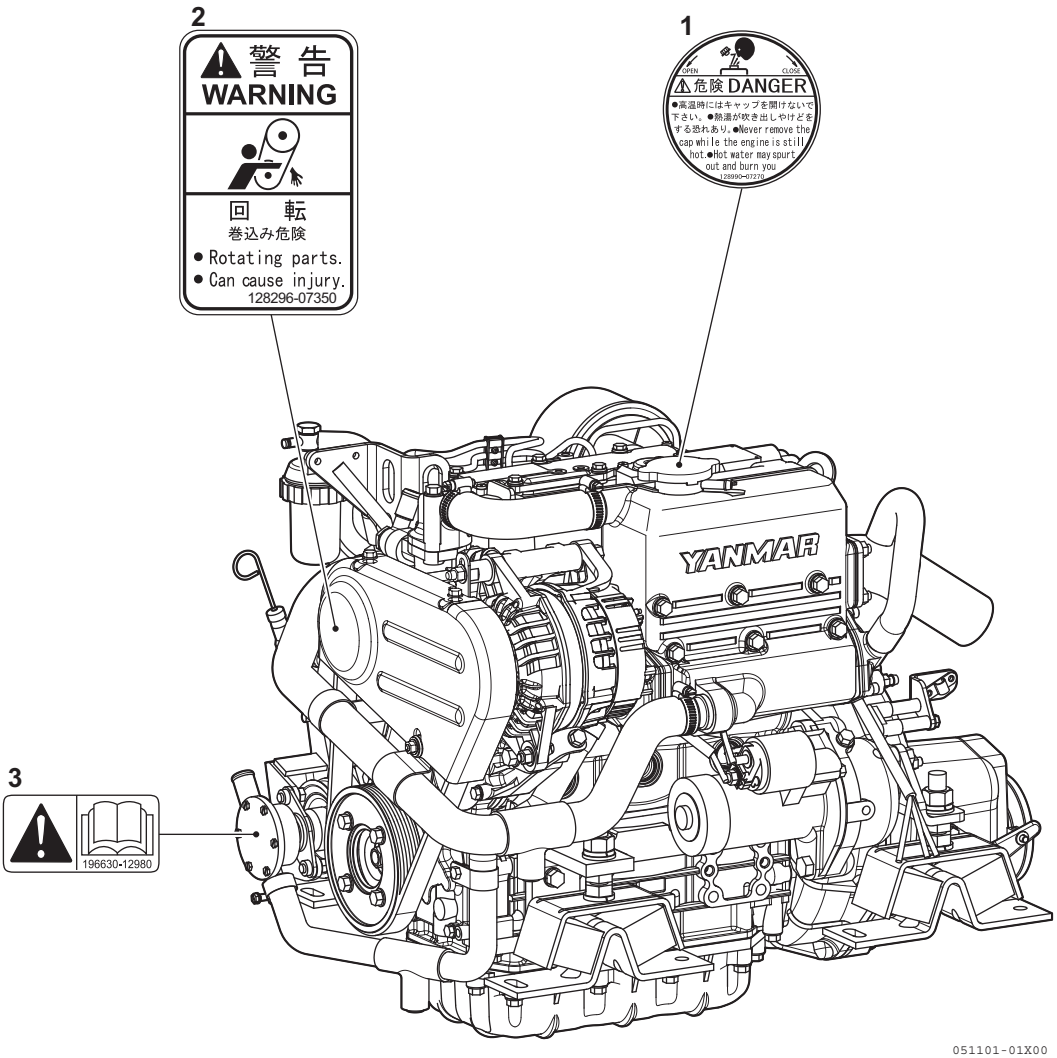

Figure 1

1–Part Number: 128990-07270
2–Part Number: 128296-07350
3–Part Number: 196630-12980

PRODUCT OVERVIEW

YANMAR YM SERIES FEATURES AND APPLICATIONS

The YM series are four-stroke swirl pre-combustion chamber diesel engines equipped with liquid coolant systems.

The 2YM15 is a 2-cylinder engine and is naturally aspirated.

The 3YM20 is a 3-cylinder engine and is naturally aspirated.

The 3YM30AE is a 3-cylinder engine and is naturally aspirated.

The engines are equipped with a marine gear or sail drive unit.

These engines are designed for pleasure craft use and complied with EPA regulation Tier3 marine from 2009 year.

It is recommended that new vessels be propped so the engines can operate at 100 to 200 min^{-1} above the fuel stop power engine speed to allow for some added weight and hull resistance.

The engine must be able to reach the Maximum Rated Power engine speed under full load at all times.

Failure to do so can lead to reduced vessel performance, lead to increased smoke levels and cause permanent damage to your engine.

The engine must be installed correctly with coolant lines, exhaust gas lines and electrical wiring. Any auxiliary equipment attached to the engine should be easy to use and accessible for service. To handle the drive equipment, propulsion systems (including the propeller) and other inboard equipment, always observe the instructions and cautions given in the operation manuals supplied by the shipyard and equipment manufacturers.

The YM series engines are designed to be operated at maximum throttle*1 for less than 5% of total engine time (30 minutes out of every 10 hours) and cruising speed*2.

The laws of some countries may require hull and engine inspections, depending on the use, size and cruising area of the boat. The installation, fitting and surveying of this engine all require specialized knowledge and engineering skills. See Yanmars local subsidiary in your region or your authorized Yanmar Marine dealer or distributor.

---

*1 *Maximum throttle: Fuel stop power engine speed*
2YM15, 3YM20: 3600 min^{-1}
3YM30AE: 3200 min^{-1}

*2 *Cruising speed: Fuel stop power engine speed -200 min^{-1} or less*

New Engine Break-In

As with all reciprocating engines, the way your engine is operated during its first 50 hours of operation plays a very significant role in determining how long it will last and how well the engine will perform over its lifetime.

A new Yanmar diesel engine must be operated at suitable speeds and power settings during the break-in period to make the sliding parts, such as piston rings, break-in properly and to stabilize engine combustion.

During the break-in period, the engine coolant temperature gauge should be monitored; temperature should be between 71° and 87°C (160° and 190°F).

During the first 10 hours of operation, the engine should be run at maximum engine speed minus 400 to 500 min^{-1} (approximately 60 to 70% of load) most of the time. This will ensure the sliding parts break in properly. During this period, avoid operating at maximum engine speed and load to avoid damaging or scoring sliding parts.

NOTICE

Do not operate at WOT (wide open throttle) for more than a minute at a time during the first 10 hours of operation.

Do not operate the engine at low idle or at low speed and light load for more than 30 minutes at a time. Since unburned fuel and engine oil will adhere to the piston rings when operating at low speeds for long periods, this will interfere with proper movement of the rings and the engine oil consumption may increase. Low idle speed does not allow break-in of sliding parts.

If operating engine at low speed and light load, you must race the engine to clean the carbon from the cylinders and fuel injection valve.

Perform this procedure in open waters:

- With the clutch in NEUTRAL, accelerate from the low-speed position to the high-speed position briefly.
- Repeat this process five times.

Once past the initial 10 hours until 50 hours, the engine should be used over its full operating range, with special emphasis on running at relatively high power settings. This is not the time for an extended cruise at idle or low speed. The boat should be run at maximum speed minus 400 min^{-1} most of the time (approximately 70% load), with a 10 minute run at maximum minus 200 min^{-1} (approximately 80% load) every 30 minutes and a 4 to 5 minute period of operation at WOT (wide open throttle) once each 30 minutes. During this period, be sure not to operate your engine at low speed and light load for more than 30 minutes. If operating engine at low speed and light load by necessity, just after the low idle operation, be sure to race the engine.

To complete engine break-in, perform *After Initial 50 Hours of Operation* maintenance procedures. After Initial 50 Hours of Operation on page 58.

COMPONENT IDENTIFICATION

Right Side (Viewed from Flywheel) - 2YM15

Figure 1 and **Figure 2** illustrate a typical version of a 2YM15 engine. Your engine may have different equipment from that illustrated.

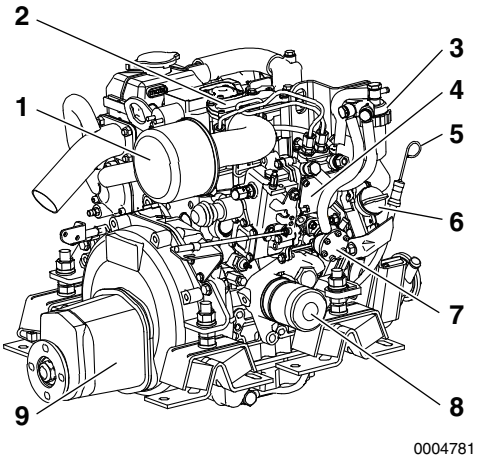

Figure 1

1 – Intake Silencer (air cleaner)
2 – Intake Manifold
3 – Fuel Filter
4 – Fuel Injection Pump
5 – Engine Oil Dipstick
6 – Engine Oil Filler Cap
7 – Fuel Feed Pump
8 – Engine Oil Filter
9 – Marine Gear

Left Side (Viewed from Flywheel) - 2YM15

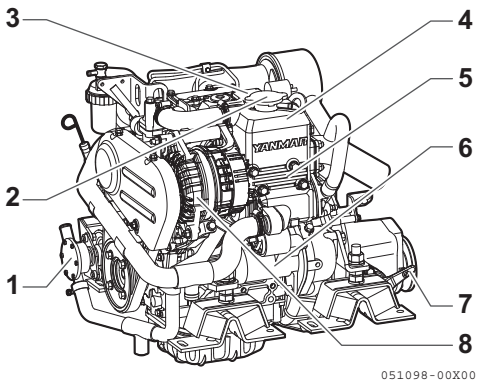

Figure 2

1 – Seawater Pump
2 – Coolant Filler Cap
3 – Engine Nameplate (on rocker arm cover)
4 – Coolant Tank / Heat Exchanger
5 – Exhaust Manifold
6 – Starter Motor
7 – Shift Lever
8 – Alternator

Right Side (Viewed from Flywheel) - 3YM20

Figure 3 and **Figure 4** illustrate a typical version of a 3YM20 engine. Your engine may have different equipment from that illustrated.

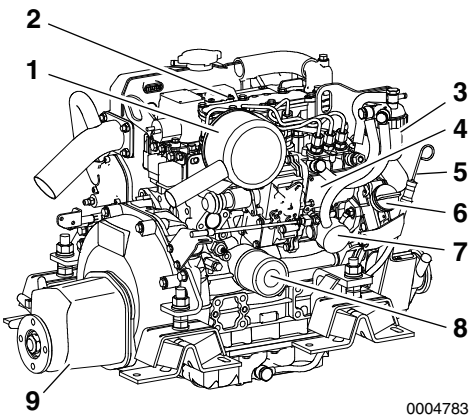

Figure 3

1 – Intake Silencer (air cleaner)
2 – Intake Manifold
3 – Fuel Filter
4 – Fuel Injection Pump
5 – Engine Oil Dipstick
6 – Engine Oil Filler Cap
7 – Fuel Feed Pump
8 – Engine Oil Filter
9 – Marine Gear

Left Side (Viewed from Flywheel) -3YM20

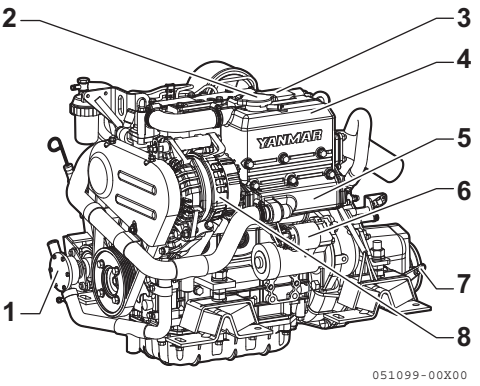

Figure 4

1 – Seawater Pump
2 – Coolant Filler Cap
3 – Engine Nameplate (on rocker arm cover)
4 – Coolant Tank / Heat Exchanger
5 – Exhaust Manifold
6 – Starter Motor
7 – Shift Lever
8 – Alternator

Right Side (Viewed from Flywheel) - 3YM30AE

Figure 5 and **Figure 6** illustrate a typical version of a 3YM30AE engine. Your engine may have different equipment from that illustrated.

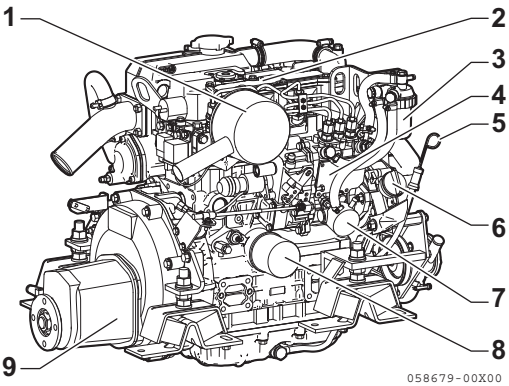

Figure 5

1 – Intake Silencer (air cleaner)
2 – Intake Manifold
3 – Fuel Filter
4 – Fuel Injection Pump
5 – Engine Oil Dipstick
6 – Engine Oil Filler Cap
7 – Fuel Feed Pump
8 – Engine Oil Filter
9 – Marine Gear

Left Side (Viewed from Flywheel) - 3YM30AE

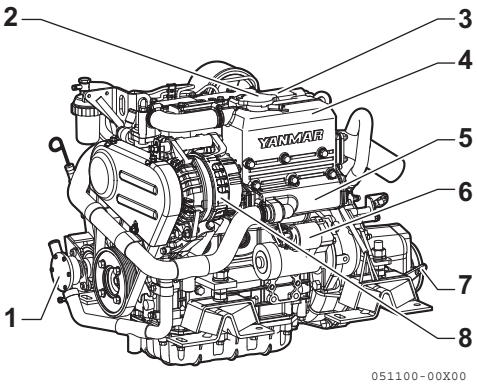

Figure 6

1 – Seawater Pump
2 – Coolant Filler Cap
3 – Engine Nameplate (on rocker arm cover)
4 – Coolant Tank / Heat Exchanger
5 – Exhaust Manifold
6 – Starter Motor
7 – Shift Lever
8 – Alternator

NAMEPLATES

The nameplates of Yanmar YM series engines are shown in **Figure 7**. Check the engine's model, output, min^{-1} and serial number on the nameplate. Please replace if damaged or lost.

The engine nameplate is attached to the engine rocker arm cover.

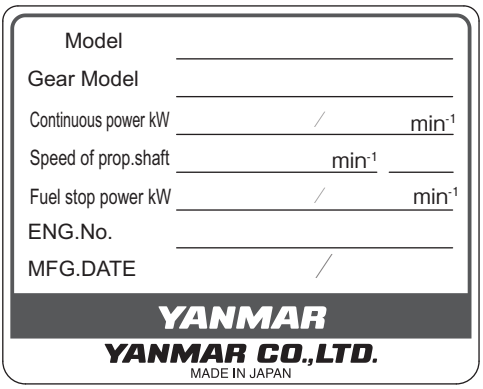

Figure 7

The marine gear nameplate **(Figure 8)** is attached to the marine gear. Check the marine gears model, gear ratio, oil used and serial number.

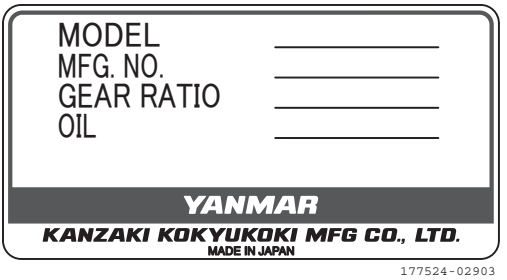

Figure 8

The sail drive nameplate **(Figure 9)** is attached to the sail drive. Check the sail drive model and serial number.

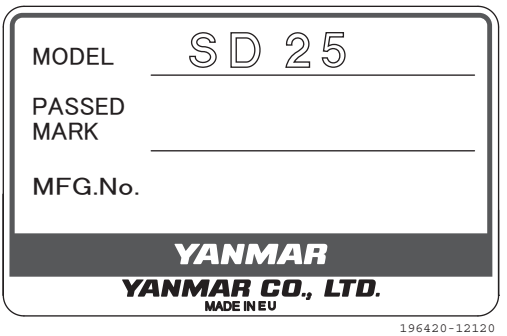

Figure 9

FUNCTION OF MAJOR COMPONENTS

Name of Component	Function
Fuel Filter	Removes dirt and water from the fuel. Drain the filter periodically. The filter element should be replaced periodically. The water separator (if equipped) should be drained periodically. *See Draining Fuel Filter / Water Separator on page 63*.
Fuel Feed Pump	Pumps fuel from the tank to the fuel injection system. Pushing the manual lever on the side of the feed pump supplies fuel to the engine when fuel priming is needed.
Fuel Feed Lever	Moving the fuel feed lever up and down feeds the fuel. The lever is used to bleed air from the fuel system after running out of fuel.
Engine Oil Filler Port	Filler port for engine oil.
Engine Oil Filter	Filters fine metal fragments and carbon from the engine oil. Filtered engine oil is distributed to the engine's moving parts. The filter is a cartridge type and the element should be replaced periodically. *See Changing the Engine Oil on page 59*.
Marine Gear Filler Port	Filler port for marine gear lube oil. Located on top of the marine gear case.
Cooling System	There are two cooling systems: closed cooling with coolant (fresh water) and seawater. The engine is cooled by the closed cooling circuit. The closed circuit is cooled by seawater using a heat exchanger.
Closed Cooling Circulation Pump	The centrifugal water pump circulates coolant inside the engine. The circulating pump is driven by a V-ribbed belt.
Seawater Pump	Pumps seawater from outside vessel to the engine. The seawater pump is gear-driven and has a replaceable rubber impeller. Do not operate it without seawater, as this will damage the impeller.
Coolant Filler Cap	The filler cap on the heat exchanger / coolant tank covers the water supply port. The cap has a pressure regulating valve. When the cooling water temperature rises, the pressure rises inside the coolant system.
Reservoir	The pressure valve in the filler cap releases vapor and hot water overflow to the reservoir. When the engine stops and the coolant cools, the pressure in the coolant tank drops. The filler cap vacuum valve then opens to send water back from the reservoir. This minimizes coolant consumption. The closed cooling system coolant level can easily be checked and refilled in this tank.
Intake Silencer (Air Cleaner)	The intake silencer guards against dirt in the air and reduces the noise of air intake.
Nameplates	Nameplates are provided on the engine and the marine gear and have the model, serial number and other data. *See Nameplates on page 14*
Starter	Starter motor for the engine; powered by the battery.
Alternator	Driven by a belt and generates electricity and charges the battery.
Engine Oil Dipstick	Gauge stick for checking the engine oil level.

CONTROL EQUIPMENT

The equipment in the control room makes remote control operation possible. It consists of the instrument panel, which is connected to the engine by a wire harness, and the remote control handle, which is connected by control cables to the engine control lever and marine gear.

Instrument Panel

Equipment and Functions

The instrument panel is located at the helm. The following instruments enable you to start or stop the engine and to monitor its condition during operation.

B20-Type

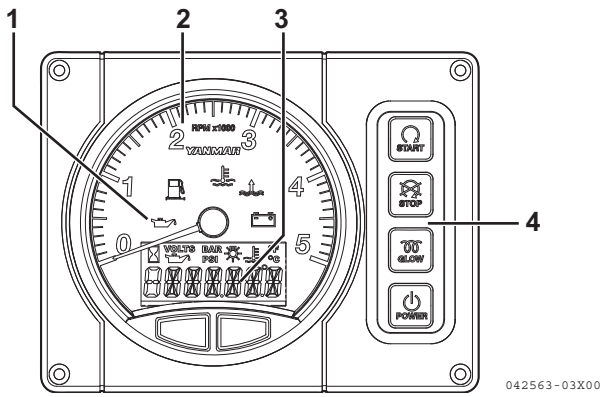

Figure 10

1 – Alarm lamps
2 – Tachometer
3 – LCD
4 – Switches (push-buttons)

Control panel switches

All switches are push-buttons.

Start switch

Pushing this switch operates the starter and starts the engine.

Stop switch

Pushing this switch stops the engine.

Glow switch

Pushing this switch for the specified time heats the glow plug in the combustion chamber. It becomes red-hot, facilitating fuel ignition. This assists starting in cold weather.

Power switch

Pushing this switch turns on or off the power.

Meters

Instrument	Function
Tachometer	Shows engine rotation speed.
Hourmeter	Shows number of operating hours. Can be used as a guide for periodic maintenance checks. The hourmeter is located at the bottom of the tachometer.
Panel Lights	When the power switch is pushed, the gauges will illuminate for easier viewing.

Note: The LCD on the instrument panel show hourmeter, display brightness and battery voltage.

Indicators and Alarms (Optional)

When a sensor detects a problem during operation, the indicator on the instrument panel will light and an alarm will sound. Indicators are located on the instrument panel and the alarms are located on the back of the panel. Under normal operating conditions, the indicators are off.

Battery Low Charge Indicator

When the alternator output is too low, the indicator will light. When charging begins, the indicator will turn off.

Coolant High Temperature Indicator and Alarm

When coolant temperature reaches the maximum allowable temperature (95°C [203°F] or higher), the indicator will light and the alarm will sound. Continuing operation at temperatures exceeding the maximum limit will result in damage and seizure. Check the load and troubleshoot the cooling system.

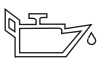

Engine Oil Low Pressure Indicator and Alarm

When the engine oil pressure falls below normal, the oil pressure sensor will send a signal to the indicator, causing it to light and the alarm to sound. Stop operation to avoid damage to the engine. Check the oil level and troubleshoot the lubrication system.

Water in Sail Drive Seal Indicator and Alarm

When water is detected between the seals of the sail drive, the indicator will light and the alarm will sound.

LCD control (hourmeter, display brightness, battery voltage)

You can switch (scroll) between displays by pressing the buttons on the bottom.

- **Switching screens by pressing the right button (Pressing the left button switches the screens in the opposite direction.)**

Press the power switch.

- After 4 seconds, the LCD shows the hourmeter.

Pressing the right button on the bottom of the LCD shows the temperature display.

This feature is not available on this engine.

Pressing the right button again shows the LCD brightness settings.
To set the brightness of the backlight:

1. Press the left button continuously and the digits of the LCD start flashing.
2. In this condition, press the left button to increase the brightness.
3. Press the right button to decrease the brightness.
   (The brightness changes in 6 steps of 20 %.)

To set the desired brightness, do not touch the buttons for 3 seconds.

Note: Continuously pressing means holding the button for approx. 2 seconds.

Next, press the right button to show the pressure display.

This feature is not available on this engine.

Press again to show the battery voltage. Pressing the button once more returns the display to the initial hourmeter.

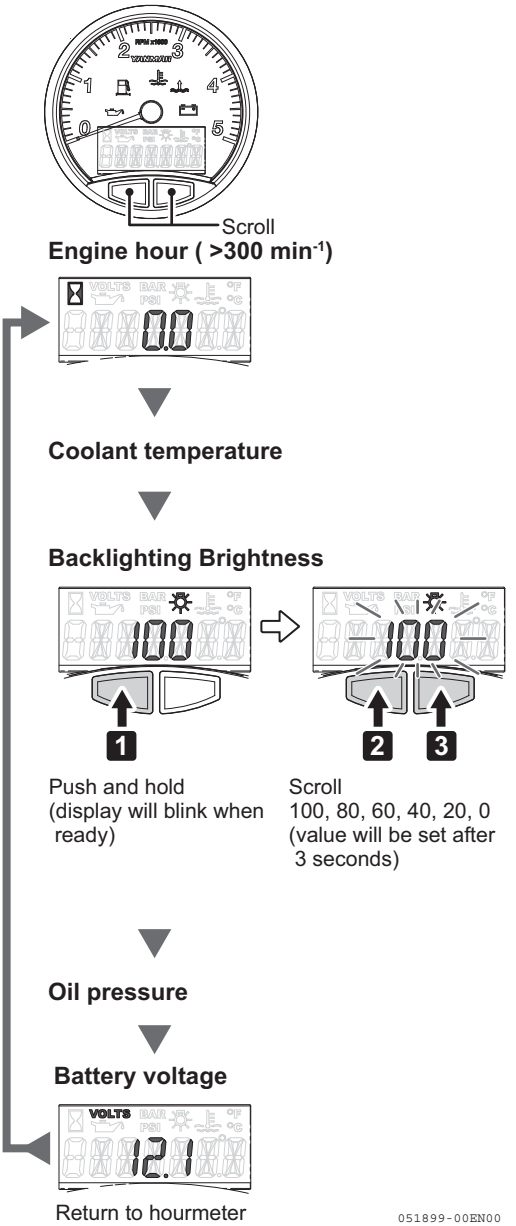

Figure 11

Setup Screen Access and Control (Setting the engine speed pulse value for B20/C30 type panel)

Use the buttons on the bottom of the LCD display to set the instrument panel. Press the left button to switch between displays.

1. Press and hold both buttons until “SET UP” appears.
2. Press the left button and go to the screen “UNIT”.
3. Press the left button and go to the next screen “ENGINE”.
4. Confirm that the display says “ENGINE”. Press the right button and “P****” appears.

Note: The pre-set value of speed pulse is indicated on the box of each panel.

5. Next, press the left button and select the speed pulse value for each engine model.

Engine model	Speed pulse value
YM with HITACHI alternator	10.29
YM with VALEO alternator	12.10

6. After confirming the value is changed correctly, press the right button to return to the “ENGINE” screen.
7. Press the left button again to go from the “ENGINE” screen to the “EXIT” screen.
8. After confirming the display, press the right button to re-start the panel and return to the hourmeter display.

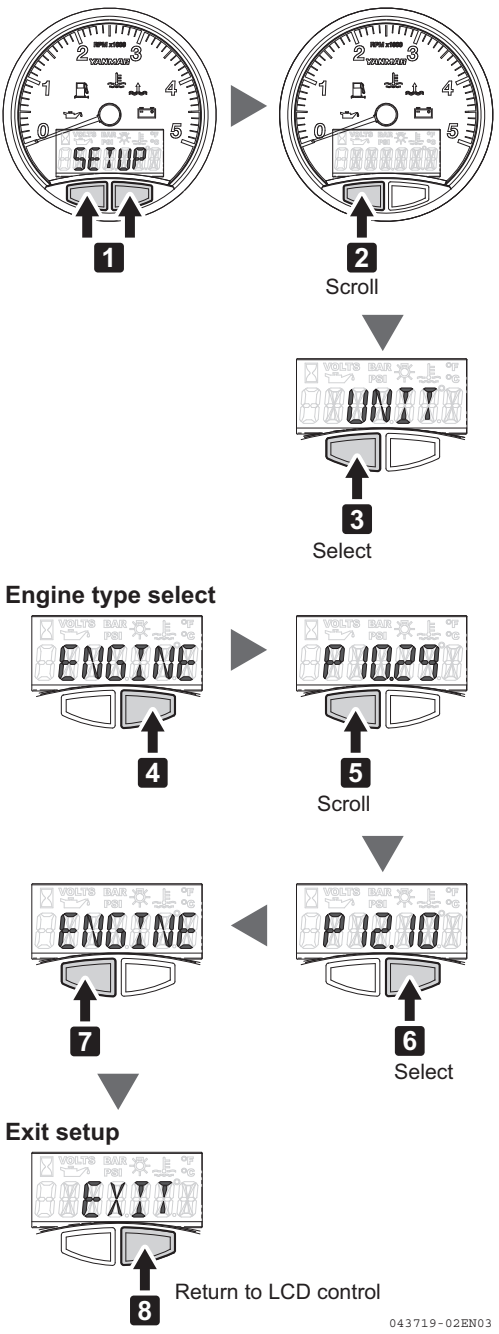

Figure 12

Alarms

Checking the Warning Devices

Before and after engine start, make sure that the instruments and warning devices operate correctly.
If the engine runs out of coolant or lubricating oil and the instruments and warning devices fail, they can not give you warning to prevent accidents. This can also lead to incorrect operation and cause further malfunctions of the engine.

Before Engine Start

1. Turn on the battery switch.
2. Push the power switch on.

- All alarm lamps light up for 4 seconds.
- After 4 seconds, the charge lamp and the lubricating oil pressure alarm lamp light up, and the hourmeter is displayed.
- The alarm buzzer sounds until the engine starts.

After Engine Start

After engine start, make sure that the warning devices operate correctly and according to “After start” in the below table.

- All alarm lamps turn off. The above check tells you whether the electric circuit for the warning lamps and alarm buzzer operate correctly. If they do not operate correctly, inspection and repair are required. Consult your dealer or distributor for repairs.

Correct operation of the warning devices				
Instrument panel (power switch)	Power ON			
	Immediately	After 2 seconds	After 4 seconds	
	Before start			After start
Starter switch	OFF			ON
Alarm buzzer	ON			OFF
Charge lamp	ON	ON	ON	OFF
Coolant temperature lamp	ON	ON	OFF	OFF
Engine lubricating oil pressure lamp	ON	ON	ON	OFF
LCD display	Yanmar	Full display	Hourmeter	

NOTICE

When the warning devices are activated and normal operation is impossible, stop the engine and do not use it until the problem has been solved.

Accessory power output

The harness attached to the panel has a terminal where the signal that is synchronized to the panel power supply can be taken off. **(Figure 13)** (Refer to the Wiring Diagrams on page 92.)

The maximum current of this output terminal is 3 A. Do not use a current higher than 3 A. For the content of the output terminal, refer to the Wiring Diagrams on page 92.

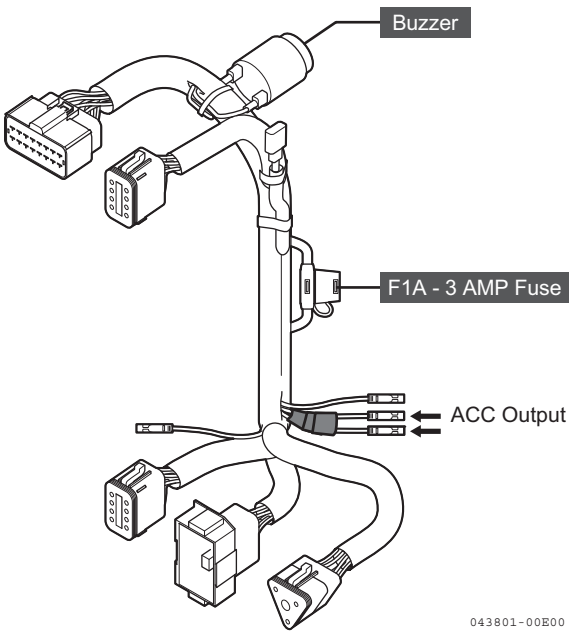

Figure 13

Single-Handle Remote Control Head

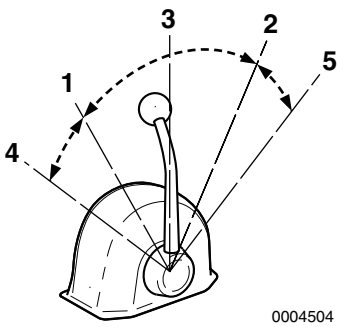

Figure 14

Note: Direction of travel will vary depending on installation location.

1 – Low Speed - FWD or REV
2 – Low Speed - FWD or REV
3 – NEUTRAL - Power to the propeller shaft is cut off and the engine idles
4 – Maximum Engine Speed - FWD or REV
5 – Maximum Engine Speed - FWD or REV

A single handle-type **(Figure 14)** should be used to operate the marine gear clutch (NEUTRAL, FORWARD and REVERSE) and to control the engine speed.

The handle controls the direction of the boat (ahead or astern) and also acts as an accelerator by increasing engine speed as the control handle is pushed further in FORWARD or REVERSE directions.

When the handle is pulled out **(Figure 15, (1))**, the engine speed can be controlled without engaging the marine gear. The marine gear remains in NEUTRAL, no load position. Turn the knob **(Figure 15, (2))** counterclockwise to move the handle or clockwise to lock the handle.

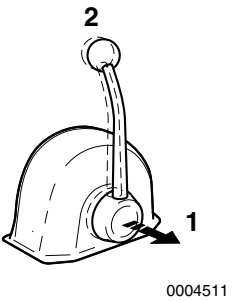

Figure 15

Note: Yanmar recommends the use of a single-handle type for the remote control system. If only a two-handle type is available in the market, reduce engine speed to 1000 min-1 or less before engaging and disengaging the marine gear clutch.

BEFORE YOU OPERATE

INTRODUCTION

This section of the *Operation Manual* describes the diesel fuel, engine oil and engine coolant specifications and how to replenish them.

SAFETY PRECAUTIONS

Before performing any operations within this section, review the *Safety* section on page *3*.

DIESEL FUEL

Diesel Fuel Specifications

⚠ WARNING

Fire and Explosion Hazard.
Diesel fuel is flammable and explosive under certain conditions.

Only use diesel fuels recommended by Yanmar for the best engine performance, to prevent engine damage and to comply with EPA warranty requirements. Only use clean diesel fuel.

Diesel fuel should comply with the following specifications. The table lists several worldwide specifications for diesel fuels.

DIESEL FUEL SPECIFICATION	LOCATION
ASTM D975 No. 2-D S15, No. 1-D S15	USA
EN590-2009	European Union
ISO 8217 DMX	International
BS 2869-A1 or A2	United Kingdom
JIS K2204 Grade No. 2	Japan

Biodiesel Fuels

Yanmar approves the use of biodiesel fuels that do not exceed a blend of 7% non-mineral oil based fuel with 93% standard diesel fuel. Such biodiesel fuels are known in the marketplace as B7 biodiesel fuels. B7 biodiesel fuel can reduce particulate matter and the emission of “greenhouse” gases compared to standard diesel fuel.

If the B7 biodiesel fuel used does not meet the approved specifications, it will cause abnormal wear of injectors, reduce the life of the engine and it may affect the warranty coverage of your engine.

B7 diesel fuels must meet certain specifications.

The biodiesel fuels must meet the minimum specifications for the country in which they are used:

- In Europe, biodiesel fuels must comply with the European Standard EN590-2009, EN14214.
- In the United States, biodiesel fuels must comply with the American Standard ASTM D6751 Grade-S15, D7467 Grade B7-S15.

Biodiesel should be purchased only from recognized and authorized diesel fuel suppliers.

Precautions and concerns regarding the use of biofuels:

- Biodiesel fuels have a higher content of methyl-esters, which may deteriorate certain metal, rubber and plastic components of the fuel system. The customer and / or boat builder are responsible to verify the usage of biodiesel compatible components on the vessel fuel supply and return systems.
- Free water in biodiesel may result in plugging of fuel filters and increased bacterial growth.
- High viscosity at low temperatures may result in fuel delivery problems, injection pump seizures and poor injection nozzle spray atomization.
- Biodiesel may have adverse effects on some elastomers (seal materials) and may result in fuel leakage and dilution of the engine lubricating oil.

- Even biodiesel fuels that comply with a suitable standard as delivered will require additional care and attention to maintain the quality of the fuel in the equipment or other fuel tanks. It is important to maintain a supply of clean, fresh fuel. Regular flushing of the fuel system, and / or fuel storage containers, may be necessary.
- The use of biodiesel fuels that do not comply with the standards as agreed to by the diesel engine manufacturers and the diesel fuel injection equipment manufacturers, or biodiesel fuels that have degraded as per the precautions and concerns above, may affect the warranty coverage of your engine.

Additional Technical Fuel Requirements

- The fuel cetane number should be 40 or higher.
- The sulfur content must not exceed 15 ppm by volume.
  A higher sulfur content fuel may cause sulfuric acid corrosion in the cylinders of the engines.
  Especially in U.S.A. and Canada, Ultra Low Sulfur fuel must be used.
- Never mix kerosene, used engine oil or residual fuels with the diesel fuel.
- Water and sediment in the fuel should not exceed 0.05% by volume.
- Keep the fuel tank and fuel-handling equipment clean at all times.
- Ash content not to exceed 0.01% by volume.
- Carbon residue content not to exceed 0.35% by volume. Less than 0.1% is preferred.
- Total aromatics content should not exceed 35% by volume. Less than 30% is preferred.
- PAH (polycyclic aromatic hydrocarbons) content should be below 10% by volume.
- Do not use Biocide.
- Lubricity: Wear mark of WS1.4 should be Max. 0.016 in. (400 µm) at HFRR test.

Handling of Diesel Fuel

⚠ WARNING

Fire and Explosion Hazard.

Only fill the fuel tank with diesel fuel. Filling the fuel tank with gasoline may result in a fire and will damage the engine. Never refuel with the engine running. Wipe up all spills immediately. Keep sparks, open flames or any other form of ignition (match, cigarette, static electric source) well away when refueling.

Fire and Explosion Hazard.

Always put the diesel fuel container on the ground when transferring the diesel fuel from the pump to the container. Hold the hose nozzle firmly against the side of the container while filling it. This prevents static electricity buildup which could cause sparks and ignite fuel vapors.

---

1. Water and dust in the fuel may cause engine failure. When fuel is stored, be sure that the inside of the storage container is clean and dry, and that the fuel is stored away from dirt or rain.

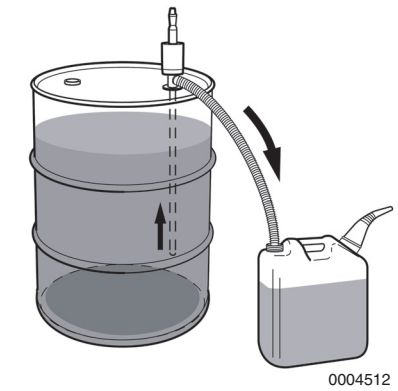

Figure 1

2. Keep the fuel container stationary for several hours to allow any dirt or water to settle to the bottom of the container. Use a pump to extract the clear, filtered fuel from the top of the container.

Fuel Tank (Optional)

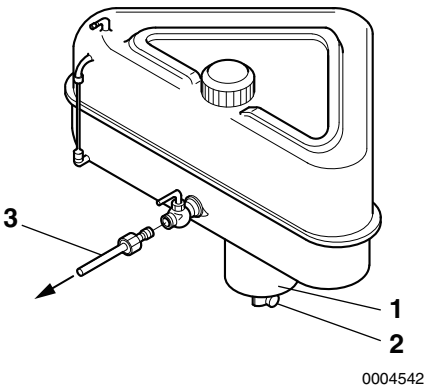

Figure 2

1 – Sediment Bowl
2 – Drain Cock
3 – Fuel Line to Engine

Install a drain cock **(Figure 2, (2))** at the bottom of the fuel tank to remove water and contaminants from the sediment bowl **(Figure 2, (1))**.

The fuel outlet should be positioned 20 to 30 mm (0.75 to 1.125 in.) above the bottom of the tank so that only clean fuel is distributed to the engine.

Fuel System

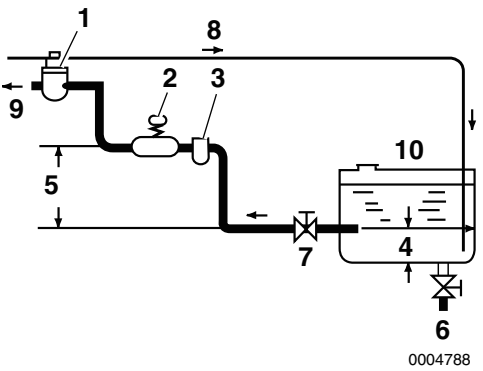

Figure 3

1 – Fuel Filter
2 – Fuel Feed Pump (priming lever)
3 – Fuel / Water Separator (optional)
4 – Approximately 20 to 30 mm (0.75 to 1.125 in.)
5 – Within 500 mm (20 in.)
6 – Drain Cock
7 – Fuel Cock
8 – Fuel Return Line
9 – To Fuel Injection Pump
10 – Fuel Tank

Install the fuel line from the fuel tank to the fuel injection pump as shown in **Figure 3**. The recommended fuel / water separator **(Figure 3, (3))** (optional) is installed at the center section of that line.

Filling the Fuel Tank

Before filling fuel tank for the first time:

⚠ WARNING

Fire and Explosion Hazard.
Never refuel with the engine running.

Rinse fuel tank with kerosene or diesel fuel. Dispose of waste properly.

To fill the fuel tank:

⚠ WARNING

Fire and Explosion Hazard.
Operate bilge ventilation (blowers) for a minimum of 5 minutes to purge fumes from engine compartment after refueling. Never operate bilge blower while refueling. Doing so can pump explosive fumes into the engine compartment and result in an explosion.

---

1. Clean the area around the fuel cap.
2. Remove the fuel cap from the fuel tank.
3. Fill the tank with clean fuel free of oil and dirt.

⚠ WARNING

Fire and Explosion Hazard.
Hold the hose nozzle firmly against the filler port while filling. This prevents static electricity buildup which could cause sparks and ignite fuel vapors.

---

4. Stop fueling when the gauge shows the fuel tank is full.

⚠ WARNING

Fire and Explosion Hazard.
Never overfill the fuel tank.

---

5. Replace the fuel cap and hand-tighten. Over-tightening the fuel cap will damage it.

Bleeding the Fuel System

The fuel system has an automatic air bleeding device that purges air from the fuel system. No manual air bleeding is required for normal operation. Bleeding must be done if any fuel system maintenance has been performed (replacement of fuel filter, etc.) or if the engine does not start after several attempts.

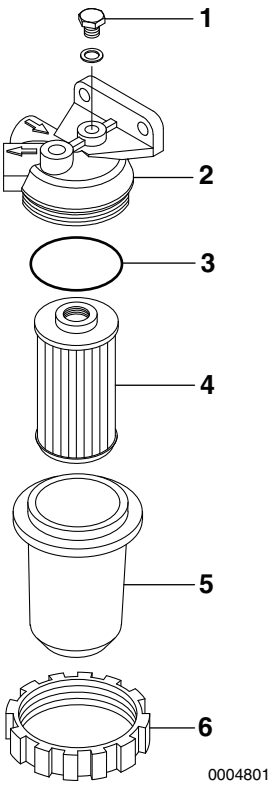

Figure 4

1 – Air Bleed Screw
2 – Bracket
3 – O-Ring
4 – Fuel Filter Element
5 – Fuel Filter Housing
6 – Retaining Ring

1. Check the fuel level in the fuel tank. Refill if necessary.
2. Open the fuel cock of the fuel tank.

⚠ WARNING

Exposure Hazard.
Always wear safety glasses when bleeding the fuel system.

3. Loosen the air bleed screw **(Figure 4, (1))** 2 to 3 turns.
4. Push up and down on the manual priming lever located on the side of the fuel feed pump to release air out of the air bleed screw. Always use an approved container to catch the diesel fuel.
5. Continue pumping until a solid stream of fuel with no air bubbles begins to flow.
6. Tighten the air bleed screw.

Note: After engine start-up, the automatic air-bleeding device works to purge the air in the fuel system.

ENGINE OIL

Engine Oil Specifications

NOTICE

Only use the engine oil specified. Other engine oils may affect warranty coverage, cause internal engine components to seize and / or shorten engine life.
Never mix different types of engine oil. This may adversely affect the lubricating properties of the engine oil.

Use an engine oil that meets or exceeds the following guidelines and classifications:

- API Service Categories: CD,CF, CF-4, CI and CI-4.

  The oil must be changed when the Total Base Number (TBN) has been reduced to 2.0.

  TBN (mgKOH/g) test method: JIS K-2501–5.2–2(HCI), ASTM D4739(HCI)

- Recommended SAE Viscosity: 10W-30, 15W-40. Engine oil 10W-30 and 15W-40 can be used throughout the year.
- Never use API Service Category CG-4 or CH-4 oils.

NOTICE

- Be sure the engine oil, engine oil storage containers and engine oil filling equipment are free of sediment or water.
- Change the engine oil after the first 50 hours of operation and then at every 150 hours thereafter. *See Changing the Engine Oil on page 59*.
- Select the oil viscosity based on the ambient temperature where the engine is being operated. *See Engine Oil Viscosity* **Figure 5**.
- Yanmar does not recommend the use of engine oil "additives."

Handling Engine Oil

- When handling and storing engine oil, be careful not to allow dust and water to contaminate the oil. Clean around the filler port before filling.
- Do not mix lube oils of different types or brands. Mixing may cause the chemical characteristics of the oil to change and lubricating performance to decrease, reducing the engine's life.
- Engine oil should be replaced at the specified intervals, regardless of the engine's operation history. *See Periodic Maintenance Schedule on page 53*.

Engine Oil Viscosity

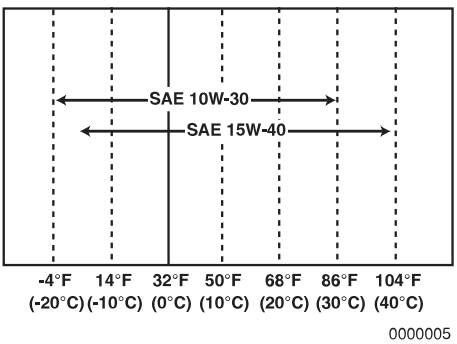

Figure 5

- Select the appropriate engine oil viscosity based on the ambient temperature shown in the SAE Service Grade Viscosity Chart **(Figure 5)**.

NOTICE

If you intend to operate your equipment at temperatures outside the limits shown, you must consult your authorized Yanmar Marine dealer or distributor for special lubricants or starting aids.

Checking the Engine Oil

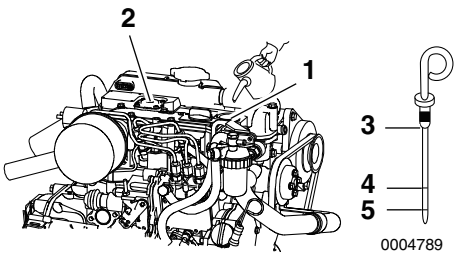

Figure 6

1 – Filler Port
2 – Rocker Arm Cover
3 – Dipstick
4 – Upper Limit
5 – Lower Limit

Note: 3YM30AE shown. Other models are similar.

1. Make sure the engine is off. It is recommended that the engine be as level as possible before checking the oil.

NOTICE

Prevent dirt and debris from contaminating engine oil. Carefully clean the dipstick, filler port cap and the surrounding area before you remove the cap.

2. Remove the dipstick**(Figure 6, (3))** and wipe with a clean cloth.
3. Fully reinsert dipstick.
4. Remove the dipstick. The oil level should be between upper **(Figure 6, (4))** and lower **(Figure 6, (5))** lines on the dipstick.
5. Add oil if necessary. *See Adding Engine Oil on page 30*.
6. Fully reinsert dipstick.

Adding Engine Oil

1. Remove the yellow oil filler port cap from the filler port **(Figure 6, (1))** on the rocker arm cover **(Figure 6, (1))** and fill with engine oil.

NOTICE

Prevent dirt and debris from contaminating engine oil. Carefully clean the dipstick, filler port cap and the surrounding area before you remove the cap.

2. Fill with engine oil to the upper limit **(Figure 6, (4))** on the dipstick **(Figure 6, (3))**.

NOTICE

Never overfill the engine with engine oil.

3. Insert the dipstick fully to check the level.

NOTICE

Always keep the oil level between upper and lower lines on the oil cap / dipstick.

4. Hand-tighten the filler port cap securely.

MARINE GEAR OR SAIL DRIVE OIL

Marine Gear Oil Specifications

Use marine gear oil that meets or exceeds the following guidelines and classifications:

KM2P-1 (S), (G) or (GG):

- API Service Categories: CD or higher
- SAE Viscosity: #20 or #30

Sail Drive Oil Specifications-SD25

Refer to the Sail Drive Operation Manual for the procedure to fill or replace the sail drive oil.

SD25:

- API Service Category: GL4.5
- SAE Viscosity: 90 or 80W-90

Checking Marine Gear Oil

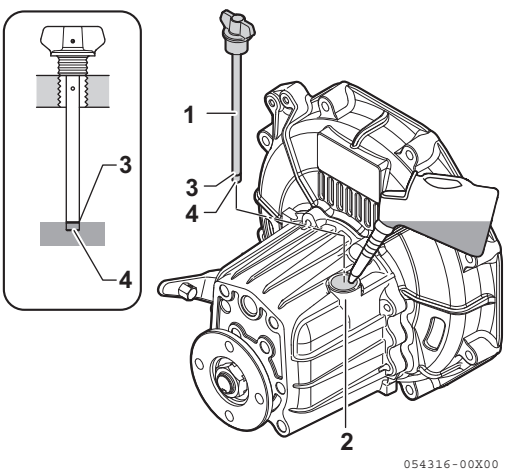

Figure 7

1 – Dipstick (Filler cap combined type)
2 – Marine Gear Filler Port
3 – Upper Limit
4 – Lower Limit (Dipstick end)

1. Make sure the engine is off. Make sure the engine is as level as possible and wipe area clean around the marine gear filler port **(Figure 7, (2))**.
2. Remove the filler cap at the top of the housing.
3. Remove the dipstick **(Figure 7, (1))** and wipe with a clean cloth.
4. Re- insert the dipstick without screw in, please see illustration **(Figure 7)**.
5. Remove the dipstick. The oil level should be between the upper **(Figure 7, (3))** and lower **(Figure 7, (4))** lines on the dipstick.
6. Screw in the dipstick.

Adding Marine Gear Oil

1. Make sure the engine is as level as possible.
2. Remove the filler cap at the top of the housing.

NOTICE

Never overfill the marine gear with oil.

3. Fill with oil to the upper limit on the dipstick **(Figure 7, (3))**. See Marine Gear Oil Specifications on page 29.
4. Screw in the dipstick.
5. Hand-tighten the filler port cap.

Checking and Adding Sail Drive Oil

Refer to the Sail Drive Operation Manual for the procedure for checking and filling the sail drive oil.

ENGINE COOLANT

Engine Coolant Specifications

Note: In the U.S., LLC is required for the warranty to be valid.

- Texaco Long Life Coolant (LLC), both standard and premixed, product code 7997 and 7998
- Havoline Extended Life Antifreeze / Coolant, product code 7994

Following the manufacturer's recommendations, use a proper LLC which will not have any adverse effects on the materials (cast iron, aluminum, copper, etc.) of the engine's cooling system.

Always use the mixing ratios specified by the antifreeze manufacturer for the temperature range.

Coolant (Closed Cooling System)

NOTICE

Always add LLC to soft water especially when operating in cold weather. Never use hard water. Water should be clean and free from sludge or particles. Without LLC, cooling performance will decrease due to scale and rust in the coolant system. Water alone may freeze and form ice; it expands approximately 9% in volume. Use the proper amount of coolant concentrate for the ambient temperature as specified by the LLC manufacturer. LLC concentration should be a minimum of 30% to a maximum of 60%. Too much LLC will decrease the cooling efficiency. Excessive use of antifreeze also lowers the cooling efficiency of the engine. Never mix different types or brands of LLC, as a harmful sludge may form. Mixing different brands of antifreeze may cause chemical reactions, and may make the antifreeze useless or cause engine problems.

Checking and Adding Coolant

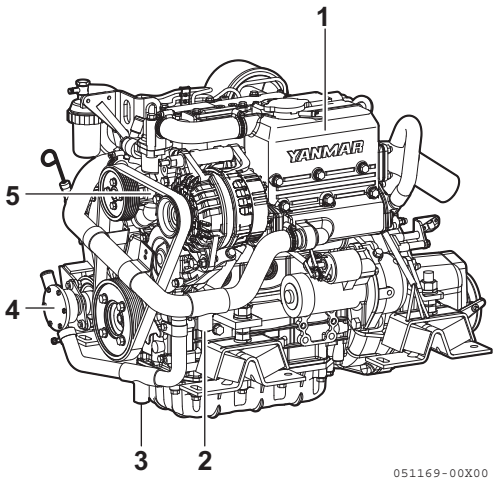

Figure 8

1 – Coolant Tank / Heat Exchanger
2 – Coolant Drain Plug
3 – Seawater Drain Plug
4 – Seawater Pump
5 – Coolant Pump

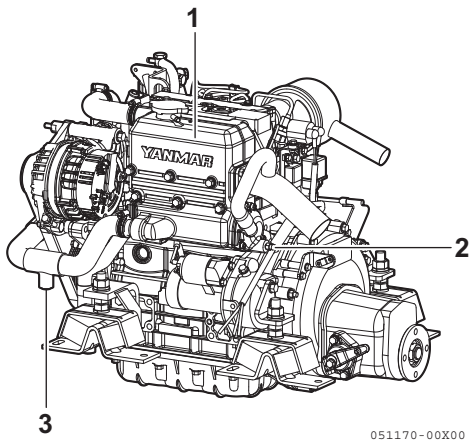

Figure 9

1 – Coolant Tank / Heat Exchanger
2 – Seawater Drain Cock
3 – Coolant Drain Plug

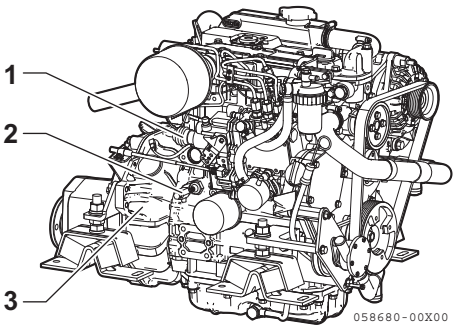

Figure 10

1 – Stop Solenoid
2 – Coolant Drain Cock
3 – Flywheel Housing

1. Allow the engine to cool.

Note: The drain cocks are opened before shipping from the factory. Close all drain cocks before filling the system with coolant.

2. Ensure all drain cocks are closed.
3. Loosen the coolant tank filler cap to relieve the pressure, then remove the filler cap.

⚠ WARNING

Burn Hazard.

Never remove the coolant filler cap if the engine is hot. Steam and hot engine coolant will spray out and seriously burn you. Allow the engine to cool down before you attempt to remove the cap.

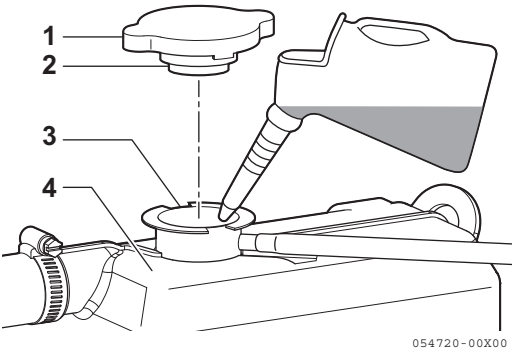

Figure 11

1 – Filler Cap Tabs
2 – Coolant Filler Cap
3 – Filler Port Notches
4 – Coolant Tank / Heat Exchanger

4. Pour coolant slowly into the coolant tank / heat exchanger **(Figure 11, (4))** to avoid air bubbles. Fill until coolant overflows from the filler port.

NOTICE

Never pour cold coolant into a hot engine.

5. Align the filler cap tabs **(Figure 11, (1))** with filler port notches **(Figure 11, (3))** and tighten the filler cap **(Figure 11, (2))**.

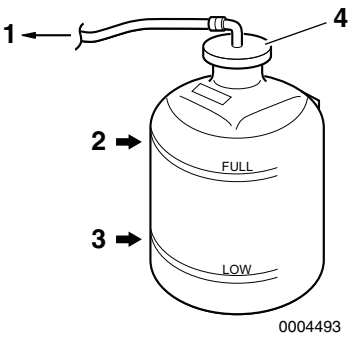

Figure 12

1 – Rubber Hose to Coolant Tank
2 – FULL Mark
3 – LOW Mark
4 – Reservoir cap

6. Check the coolant level in the reservoir. The level should be at the FULL mark **(Figure 12, (2))**.

Note: The coolant level rises in the reservoir during operation. After stopping the engine, the coolant will cool down and the extra coolant will return to the coolant tank.

NOTICE

Never pour cold coolant into a hot engine.

7. Remove reservoir cap **(Figure 12, (4))** to add coolant if necessary. Do not add water.
8. Replace the filler cap and tighten it firmly. Failure to do so will cause coolant to leak.

Reservoir Capacity
0.8 L (0.8 qt)

9. Check the rubber hose **(Figure 12, (1))** connecting the reservoir to the coolant tank / heat exchanger. Replace if damaged.

Note: If the coolant runs low too often or the coolant level in the coolant tank drops without any change in the level in the reservoir, there may be water or air leaks in the cooling system. Consult authorized Yanmar dealer or distributor.

CRANKING THE ENGINE

NOTICE

When the engine has not been used for a long period of time, engine oil will not be distributed to all of the operating parts. Using the engine in this condition will lead to seizure. After a long period of no use, distribute engine oil to each part by cranking. Perform in accordance with the following procedures before beginning operation.

1. Open seacock.
2. Open fuel cock.
3. Put remote control shift lever in NEUTRAL. *See Starting the Engine on page 39*.
4. Turn on the battery switch (if equipped).
5. Crank the engine.

   1- Push the power switch on the instrument panel and turn on the power.

   2- Operate the starter while pushing in the emergency stop button **(Figure 13)** on the back of the fuel pump. This stops the fuel supply.

   When you push the start switch on the instrument panel while the emergency button is pushed in, the starter operates and the engine cranks.

   Crank the engine 5 seconds.

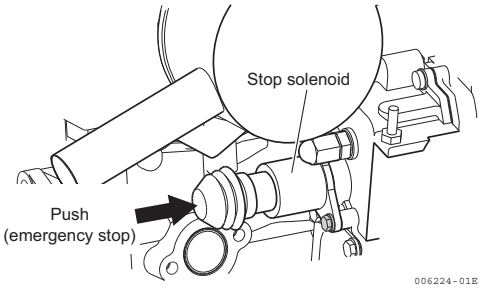

Figure 13

6. Continue cranking the engine for about 5 seconds, checking for abnormal sounds.
   If you cannot find any abnormal sounds, push the power switch and turn off the engine.

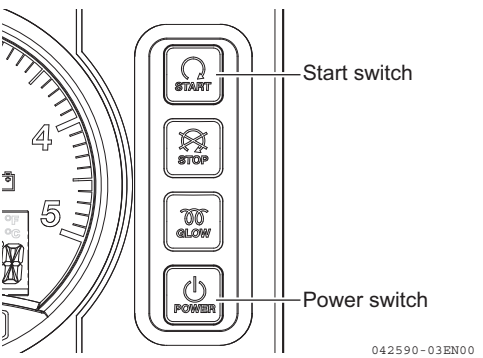

Figure 14

⚠ WARNING

Never touch or allow your clothes to touch the moving parts of the engine during operation. If a part of your body or clothing is caught in the front drive shaft, V-ribbed belt, propeller shaft, etc. serious injury may result. Check to see that no tools, pieces of cloth, etc. are left on or around the engine.

ENGINE OPERATION

INTRODUCTION

This section of the *Operation Manual* describes the diesel fuel, engine oil and engine coolant specifications and how to replenish them. It also describes the daily engine checkout.

SAFETY PRECAUTIONS

Before performing any operations within this section, review the *Safety* section on page *3*.

⚠ WARNING

Fire and Explosion Hazard

Never jump-start the engine. Sparks caused by shorting the battery to the starter terminals may cause a fire or explosion. ONLY use the start switch on the instrument panel to start the engine.

Sudden Movement Hazard

Be sure the boat is in open water away from other boats, docks or other obstructions before increasing engine speed. Avoid unexpected equipment movement. Shift the marine gear into the NEUTRAL position any time the engine is at idle.

To prevent accidental equipment movement, never start the engine in gear.

Sever Hazard

Keep children and pets away while the engine is operating.

NOTICE

If any indicator illuminates during engine operation, stop the engine immediately. Determine the cause and repair the problem before you continue to operate the engine.

If the alarm indicater with audible alarm fails to display and go out about 3 seconds after the ignition switch is turned on, consult authorized Yanmar Marine dealer or distributor for service before operating the engine

---

If the vessel is equipped with a water lift (water lock) muffler, excessive cranking could cause seawater to enter the cylinders and damage the engine. If the engine does not start after cranking for 10 seconds, close the thru-hull water intake valve to avoid filling the muffler with water. Crank for 10 seconds at a time until the engine starts. When the engine does start, stop the engine immediately and turn off the switch.

Be sure to re-open the seacock and restart the engine. Operate the engine normally.

Observe the following environmental operating conditions to maintain engine performance and avoid premature engine wear:

- Avoid operating in extremely dusty conditions.
- Avoid operating in the presence of chemical gases or fumes.
- Never run the engine if the ambient temperature is above +40°C (+104°F) or below -16°C (+5°F).
- If the ambient temperature exceeds +40°C (+104°F), the engine may overheat and cause the engine oil to break down.
- If the ambient temperature is below -16°C (+5°F), rubber components such as gaskets and seals will harden causing premature engine wear and damage.

NOTICE

- Consult your authorized Yanmar Marine engine dealer or distributor if the engine will be operated outside of this standard temperature range.

Never engage the starter motor while the engine is running. Damage to the starter motor pinion and / or ring gear will result.

STARTING THE ENGINE

1. Open the seacock (if equipped).
2. Open the fuel tank cock.
3. Put remote control handle in NEUTRAL.

Note: Safety equipment should make it impossible to start the engine in any other position than NEUTRAL.

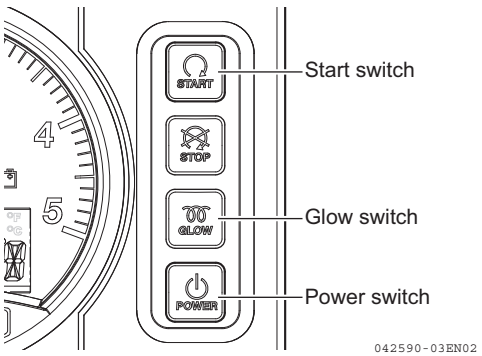

Figure 1

4. Turn on the battery switch (if equipped). Do not turn off the battery switch during engine operation. Also, turn it off when the engine does not operate.
5. If the alarm buzzer and all warning lamps operate when you turn on the power switch on the instrument panel, the warning devices operate correctly.
6. Pushing the start switch turns on the engine. Release the switch after the engine starts. If the warning lamps and the alarm buzzer stops operating, the warning devices operate correctly.

If the Engine Fails to Start

Before pushing the start switch again, be sure to confirm that the engine has stopped completely. If an attempt to restart is made while the engine is running, the pinion gear of the starter motor will be damaged.

NOTICE

Never hold for longer than 15 seconds or the starter motor will overheat.

Never attempt to restart the engine if the engine has not stopped completely. Pinion gear and starter motor damage will occur.

Note: Push and hold the start switch for a maximum of 15 seconds. If the engine does not start the first time, wait for about 15 seconds before trying again.

NOTICE

If the vessel is equipped with a water lift (water lock) muffler, excessive cranking could cause seawater to enter the cylinders and damage the engine. If the engine does not start after cranking for 15 seconds, close the thru-hull water intake valve to avoid filling the muffler with water. Crank for 10 seconds at a time until the engine starts. When the engine does start, stop the engine immediately and turn off the power switch. Be sure to re-open the seacock and restart the engine. Operate the engine normally.

Air Bleeding the Fuel System After Starting Failure

If the engine does not start after several attempts, there may be air in the fuel system. If air is in the fuel system, fuel cannot reach the fuel injection pump. Bleed the air out of the system. *See Bleeding the Fuel System on page 28*.

Starting at Low Temperatures

Comply with local environmental requirements. Use engine heaters to avoid starting problems and white smoke. Do not use starting aids.

NOTICE

Never use an engine starting aid such as ether. Engine damage will result.

To limit white smoke, run the engine at low speed and under moderate load until the engine reaches normal operating temperature. A light load on a cold engine provides better combustion and faster engine warm-up than no load.

Avoid running the engine at idling speed any longer than necessary.

Starting with Glow plug (If Equipped)

1. Open the seacock (if equipped).
2. Open the fuel tank cock.
3. Put remote control handle in NEUTRAL.
4. Turn the battery switch on (if equipped).
5. Push the power switch on. Ensure that the instrument panel indicators light and the alarm sounds. This shows that indicators and alarm are working correctly.

Note: The coolant high temperature alarm indicator does not come on during start-up.

6. Push and hold the glow switch for 10 seconds.
7. Push the start switch. Release the start switch when the engine has started. The alarm should stop and the indicators should go out.

NOTICE

Never hold the start switch for longer than 15 seconds or the starter motor will overheat.

After the Engine has Started

After the engine has started, check the following items at a low engine speed:

1. Check that the gauges, indicators and alarm are normal.
   - Normal coolant operating temperature is approximately 76° to 90°C (169° to 194°F).
   - Normal oil pressure at 3000 min^{-1} is 0.28 to 0.54 MPa (41 to 78 psi).
2. Check for water, fuel or oil leakage from the engine.
3. Check that the smoke color, engine vibration and sound are normal.
4. When there are no problems, keep the engine at low speed with the boat still stopped to distribute engine oil to all parts of the engine.
5. Check that sufficient cooling water is discharged from the seawater outlet. Operation with inadequate seawater discharge will damage the impeller of the seawater pump. If seawater discharge is too low, stop the engine immediately. Identify the cause and repair.

NOTICE

The engine will seize if it is operated when seawater discharge is too small or if load is applied without any warming up operation.

For troubleshooting assistance, see *Troubleshooting After Starting on page 73* or *Troubleshooting Chart on page 75*. If necessary, consult authorized Yanmar dealer or distributor.

REMOTE CONTROL HANDLE OPERATION

Acceleration and Deceleration

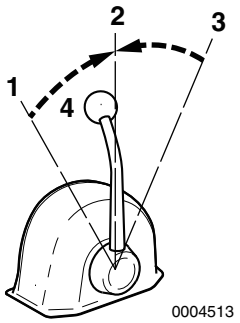

Figure 2

1 – FORWARD or REVERSE
2 – NEUTRAL
3 – REVERSE or FORWARD
4 – Throttle Handle / Shifting Handle

Note: Direction of travel will vary depending on installation location.

Use the throttle handle **(Figure 2, (4))** to control acceleration and deceleration. Move the handle slowly.

Shifting the Engine

⚠ WARNING

Sudden Movement Hazard.

The boat will start to move when the marine gear is engaged:

- **Ensure the boat is clear of all obstacles forward and aft.**
- **Quickly shift to the FORWARD position then back to the NEUTRAL position.**
- **Observe whether the boat moves in the direction you expect.**

NOTICE

Shifting the marine gear while operating at high speed or not pushing the handle fully into position (partial engagement) will result in damage to marine gear parts and abnormal wear.

1. Before using the marine gear, be sure to move the throttle handle to a low idle position (less than 1000 min^{-1}). Move the throttle handle slowly to a higher speed position after completing marine gear engagement.
2. When moving the handle between FORWARD **(Figure 2, (1 or 3))** and REVERSE **(Figure 2, (3 or 1))**, bring the handle to NEUTRAL **(Figure 2, (2))** and pause before slowly shifting to the desired position. Never shift abruptly from FORWARD to REVERSE or vice versa.

NOTICE

- Never shift the marine gear at high engine speed. During normal operation, the marine gear should only be shifted with the engine at idle.
- When sailing, set the remote control handle in NEUTRAL. Not doing so WILL introduce slippage or any damage and void your warranty.

CAUTIONS DURING OPERATION

NOTICE

Engine trouble can arise if the engine is operated for a long time under overloaded conditions with the control handle in the full throttle position (maximum engine speed position), exceeding the continuous rated output engine speed. Operate the engine at about 100 min^{-1} lower than the full throttle engine speed.

Note: If the engine is in the first 50 hours of operation, see New Engine Break-In on page 10 .

Always be on the lookout for problems during engine operation.

Pay particular attention to the following:

- Is sufficient seawater being discharged from the exhaust and seawater outlet?

  If the discharge is small, stop the engine immediately; identify the cause and repair.

- Is the smoke color normal?

  The continuous emission of black smoke indicates engine overloading. This shortens the engines life and should be avoided.

- Are there abnormal vibrations or noise?

NOTICE

Excessive vibration may cause damage to the engine, marine gear, hull and onboard equipment. In addition, it causes able passenger and crew discomfort.

Depending on the hull structure, engine and hull resonance may suddenly become great at a certain engine speed range, causing heavy vibrations. Avoid operation in this speed range. If you hear any abnormal sounds, stop the engine and inspect.

- Alarm buzzer sounds during operation.

NOTICE

If any alarm indicator with audible alarm sound appears on the display during engine operation, stop the engine immediately. Determine the cause and repair the problem before you continue to operate the engine.

- Is there water, oil or fuel leakage, or are there any loose bolts?

  Check the engine room periodically for any problems.

- Is there sufficient diesel fuel in the diesel fuel tank?

  Replenish diesel fuel before leaving the dock to avoid running out of fuel during operation.

- When operating the engine at low speed for long periods of time, race the engine once every 2 hours.

NOTICE

Racing the engine: With the gear in NEUTRAL, accelerate from the low-speed position to the high-speed position and repeat this process about five times. This is done to clean out carbon from the cylinders and the fuel injection valve. Neglecting to race the engine will result in poor smoke color and reduce engine performance.

- If possible, periodically operate the engine at near maximum engine speed while underway. This will generate higher exhaust temperatures, which will help clean out hard carbon deposits, maintaining engine performance and prolonging the life of the engine.

NOTICE

Never turn off the battery switch (if equipped) or short the battery cables during operation. Damage to the electric system will result.

SHUTTING DOWN THE ENGINE

Normal Shutdown

1. Reduce engine speed to low idle and put remote control handle in NEUTRAL.
2. Accelerate from low speed to high speed and repeat five times. This will clean out the carbon from the cylinders and the fuel injection nozzles.
3. Allow engine to run at low speed (approximately 1000 min^{-1}) without load for 5 minutes.

NOTICE

For maximum engine life, Yanmar recommends that when shutting the engine down, you allow the engine to idle, without load, for 5 minutes. This will allow the engine components that operate at high temperatures, such as the turbocharger (if equipped) and exhaust system, to cool slightly before the engine itself is shut down.

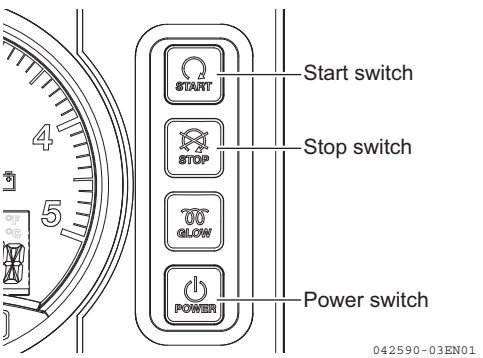

Figure 3

4. Push and hold the stop switch.
   After the engine has stopped, push the power switch off.

NOTICE

Continue to hold the stop switch in until the engine is completely stopped. If the switch is released before the engine has completely stopped, it may restart. If the engine does not shut down, *see Emergency Shutdown on page 45 .*

5. Turn off the battery switch (if equipped).
6. Close the fuel cock.
7. Close the seacock (if equipped).

NOTICE

- Be sure to close the seacock. Neglecting to close the seacock could allow water to leak into the boat and may cause it to sink.
- If seawater is left inside the engine, it may freeze and damage parts of the cooling system when the ambient temperature is below 0°C (32°F).

Emergency Shutdown

NOTICE

Never use the emergency stop switch for a normal engine shutdown. Use this switch only when stopping the engine suddenly in an emergency.

If the engine cannot be shut down by the stop switch on the panel, stop the engine by pushing the button **(Figure 4, (1))** at the back of the stop solenoid **(Figure 4, (2))**.

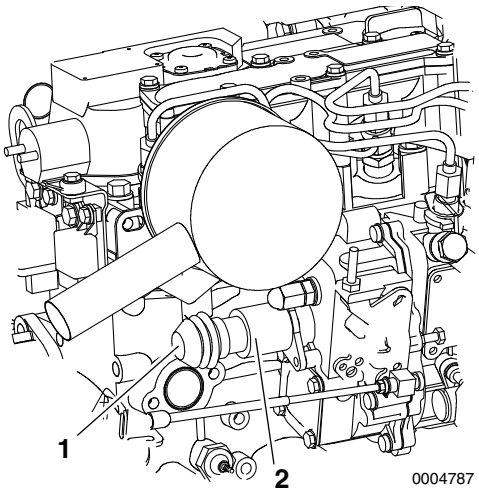

Figure 4

1 – Stop button
2 – Stop solenoid

⚠ WARNING

Sever Hazard.

Always keep hands, body parts and loose-fitting clothes away from moving / rotating parts such as the flywheel or PTO shaft.

CHECKING THE ENGINE AFTER OPERATION

- Check that the power switch is off and that the battery switch (if equipped) is turned to off.
- Fill the fuel tank. *See Filling the Fuel Tank on page 27*.
- Close seawater cock(s).
- If there is a risk of freezing, check that the cooling system contains enough coolant. *See Engine Coolant Specifications on page 32*.
- If there is a risk of freezing, drain the seawater system. *See Drain Seawater Cooling System on page 78*.
- At temperatures below 0°C (32°F), drain seawater system and connect the engine heater (if equipped).

PERIODIC MAINTENANCE

INTRODUCTION

This section of the *Operation Manual* describes the procedures for proper care and maintenance of the engine.

SAFETY PRECAUTIONS

Before performing any maintenance procedures within this section, read the following safety information and review the *Safety* section on page *3*.

⚠ WARNING

Crush Hazard

If the engine needs to be transported for repair, have a helper assist you attach it to a hoist and load it on a truck.

The engine lifting eyes are engineered to lift the weight of the marine engine only. Always use the engine lifting eyes when lifting the engine.

Additional equipment is necessary to lift the marine engine and marine gear together. Always use lifting equipment with sufficient capacity to lift the marine engine.

⚠ WARNING

Welding Hazard

- **Always turn off the battery switch (if equipped) or disconnect the negative battery cable and the leads to the alternator when welding on the equipment.**
- **Remove the engine control unit multi-pin connector. Connect the weld clamp to the component to be welded and as close as possible to the welding point.**
- **Never connect the weld clamp to the engine or in a manner which would allow current to pass through a mounting bracket.**
- **When welding is completed, reconnect the alternator and engine control unit prior to reconnecting the batteries.**

Entanglement Hazard

Never leave the power switch on when you are servicing the engine. Someone may accidentally start the engine and not realize you are servicing it.

Shock Hazard

Always turn off the battery switch (if equipped) or disconnect the negative battery cable before servicing the equipment.

Always keep the electrical connectors and terminals clean. Check the electrical harnesses for cracks, abrasions, and damaged or corroded connectors.

Never use undersized wiring for the electrical system.

Tool Hazard

Always remove any tools or shop rags used during maintenance from the area before operation.

NOTICE

Any part which is found defective as a result of inspection, or any part whose measured value does not satisfy the standard or limit, must be replaced.

Modifications may impair the engine's safety and performance characteristics and shorten the engine's life. Any alterations to this engine may void its warranty. Be sure to use Yanmar genuine replacement parts.

PRECAUTIONS

The Importance of Periodic Maintenance

Engine deterioration and wear occur in proportion to the length of time the engine has been in service and the conditions the engine is subjected to during operation. Periodic maintenance prevents unexpected downtime, reduces the number of accidents due to poor machine performance and helps extend the life of the engine.

Performing Periodic Maintenance

⚠ WARNING

Exhaust Hazard.

Never block windows, vents, or other means of ventilation if the engine is operating in an enclosed area. All internal combustion engines create carbon monoxide gas during operation. Accumulation of this gas within an enclosure could cause illness or even death. Make sure that all connections are tightened to specifications after repair is made to the exhaust system. Failure to comply could result in death or serious injury.

The Importance of Daily Checks

The Periodic Maintenance Schedule assumes that the daily checks are performed on a regular basis. Make it a habit to perform daily checks before the start of each operating day. *See Daily Checks on page 57*.

Keep a Log of Engine Hours and Daily Checks

Keep a log of the number of hours the engine is run each day and a log of the daily checks performed. Also note the date, type of repair (e.g., replaced alternator) and parts used for any service needed between the periodic maintenance intervals. Periodic maintenance intervals are every 50, 250, 500 and 1000 engine hours. Failure to perform periodic maintenance will shorten the life of the engine.

NOTICE

Failure to perform periodic maintenance will shorten the life of the engine and may void the warranty.

Yanmar Replacement Parts

Yanmar recommends that you use genuine Yanmar parts when replacement parts are needed. Genuine replacement parts help ensure long engine life.

Tools Required

Before you start any periodic maintenance procedure, make sure you have the tools you need to perform all of the required tasks.

Ask Your Authorized Yanmar Marine Dealer or Distributor for Help

Our professional service technicians have the expertise and skills to help you with any maintenance or service related procedures you need help with.

Tightening Fasteners

Use the correct amount of torque when you tighten fasteners on the engine. Applying excessive torque may damage the fastener or component and not enough torque may cause a leak or component failure.

NOTICE

The tightening torque in the Standard Torque Chart should be applied only to the bolts with a “8.8” head (JIS strength classification: 8.8). Apply 60% torque to bolts that are not listed. Apply 80% torque when tightened to aluminum alloy.

Bolt Diameter x Pitch (mm)		M6x1.0	M8x1.25	M10x1.5	M12x1.75	M14x1.5	M16x1.5
Tightening Torque	N·m	11.0 ± 1.0	26.0 ± 3.0	50.0 ± 5.0	90.0 ± 10.0	140.0 ± 10.0	230.0 ± 10.0
	ft-lb	8.0 ± 0.7	19.0 ± 2.1	37.0 ± 3.6	66.0 ± 7.2	103 ± 7.2	170 ± 7.2

EPA MAINTENANCE REQUIREMENTS

To maintain optimum engine performance and compliance with the Environmental Protection Agency (EPA) Regulations for Engines, it is essential to follow the *Periodic Maintenance Schedule on page 53* and the *Periodic Maintenance Procedures on page 57* .

EPA Requirements for USA and Other Applicable Countries

The following are the requirements for the EPA. Unless these requirements are met, the exhaust gas emissions will not be within the limits specified by the EPA.

The EPA emission regulation is applicable only in the USA and other countries that have adopted the EPA requirements in part or in whole. Determine and follow the emission regulations in the country where your engine will be operating to assist you in specified compliance.

Conditions to Ensure Compliance with EPA Emission Standards

The 2YM15, 3YM20 and 3YM30AE are EPA-certified engines.

The following are the conditions that must be met in order to ensure that the emissions during operation meet the EPA

standards:

- Ambient temperature: -20°C to +40°C (-4°F to +104°F)
- Relative humidity: 80% or lower

The diesel fuel should be:

- ASTM D975 No. 1-D S15, No. 2-D S15 or equivalent (minimum of cetane No. 40)

The lubricating oil should be:

- Type API, Class CD, CF, CF-4, CI and CI-4.

Perform the inspections as outlined in *Periodic Maintenance Procedures on page 57* and keep a record of the results.

Pay particular attention to these important points:

- Replacing the engine oil
- Replacing the engine oil filter
- Replacing the fuel filter
- Cleaning the intake silencer (air cleaner)

Note: Inspections are divided into two sections in accordance with who is responsible for performing the inspection: The user or the manufacturer.

Inspection and Maintenance

Maintenance must be performed to keep the emission values of the marine CI engine within the standard values during the warranty period.

The warranty period is determined by the age of the engine or the number of hours of operation.

Installing Sample Port

All engines subject to emission standards shall be equipped with a connection in the engine exhaust system that is located downstream of the engine, and before any point at which the exhaust contacts water (or any other cooling / scrubbing medium), for the temporary attachment of gaseous and / or particulate emissions sampling equipment.

This connection shall be internally threaded with standard pipe threads of a size not larger than 12.7 mm (0.5 in.), and shall be closed by a pipe plug when not in use. Equivalent connections are allowed.

The instructions for the proper installation and location of the required sample port, in addition to those specified above in the quoted federal regulation, are as follows:

1. The connection should be located as far downstream as reasonably practicable from any sharp bend (of 30 degrees or more) in the exhaust pipe to help ensure that a well-mixed exhaust flow sample may be taken;
2. The requirement that the connection be located before any point at which the exhaust contacts water (or any other cooling/scrubbing medium) does not include contact with water used to cool exhaust manifolds, unless the water is allowed to come into direct contact with the exhaust gases;
3. To allow ready access to the sample port, the connection should be located, if possible given the constraints of vessel design, approximately 0.6 to 1.8 m (2 to 6 ft) above a deck or walkway;
4. To facilitate insertion and withdrawal of an exhaust sample probe, there should be no obstructions for at least one and one-half exhaust pipe/stack diameters perpendicular, i.e., 90 degrees, from the sample port; and
5. If a threaded connection is used, both the internal and external threads should be coated with a high-temperature, anti-seize compound before the initial installation and at every subsequent re-installation to facilitate removal of the connection for testing.

PERIODIC MAINTENANCE SCHEDULE

Daily and periodic maintenance is important to keep the engine in good operating condition. The following is a summary of maintenance items by periodic maintenance intervals. Periodic maintenance intervals vary depending on engine application, loads, diesel fuel and engine oil used and are hard to establish definitively. The following should be treated only as a general guideline.

NOTICE

Establish a periodic maintenance plan according to the engine application and make sure to perform the required periodic maintenance at the intervals indicated. Failure to follow these guidelines will impair the engine's safety and performance characteristics, shorten the engine's life and may affect the warranty coverage on your engine.
Consult authorized Yanmar Marine dealer or distributor for assistance when checking items marked with a ●.

○: Check or Clean ◇: Replace ●: Consult your authorized Yanmar Marine dealer or distributor

System	Item		Periodic Maintenance Interval						
			Before Starting *See Daily Checks on page 57.*	**Initial 50 Hours**	**Every 50 hours or monthly which-ever comes first**	**Every 100 hours or six months which-ever comes first**	**Every 150 hours or one year which-ever comes first**	**Every 250 hours or one year which-ever comes first**	**Every 1000 hours or 4 years which-ever comes first**
Whole	Visual inspection of engine exterior		○						
Fuel System	Check the fuel level and refill if necessary		○						
	Drain water and sediment from the fuel tank			○				○	
	Drain the fuel / water separator				○				
	Replace the fuel filter element							◇	
	Check the fuel injection timing								●
	Check the fuel injector spray pattern*								●*
Lubricating System	Check the engine oil level	Engine	○						
		Marine Gear	○						
	Replace the engine oil	Engine		◇			◇		
		Marine Gear		◇				◇	
		Sail Drive				◇			
	Replace the oil filter element	Engine		◇				◇	
Cooling System	Seawater outlet		○ During Operation						
	Check coolant level		○						
	Check or replace the seawater pump impeller							○	◇
	Replace coolant		Every year. When Long Life Coolant (LLC) is used, replace every two years. *See Engine Coolant Specifications on page 32.*						
	Clean and check the seawater passages								●

○: Check or Clean ◇: Replace ●: Consult your authorized Yanmar Marine dealer or distributor

System	Item	Periodic Maintenance Interval						
		Before Starting *See Daily Checks on page 57.*	**Initial 50 Hours**	**Every 50 hours or monthly which-ever comes first**	**Every 100 hours or six months which-ever comes first**	**Every 150 hours or one year which-ever comes first**	**Every 250 hours or one year which-ever comes first**	**Every 1000 hours or 4 years which-ever comes first**
Air Intake and Exhaust System	Clean the intake silencer (air cleaner) element						○	
	Clean or replace the exhaust / water mixing elbow						○	
	Clean the breather pipe						○	
	Check the exhaust gas condition	○ During Operation						
	Check diaphragm assembly							●
Electrical System	Check the alarm and indicators	○						
	Check the electrolyte level in the battery			○				
	Adjust the tension of the alternator V-ribbed belt or replace V-ribbed belt		○				○	◇
	Check the wiring connectors						○	
Engine Cylinder Head and Block	Check for leakage of fuel, engine oil and engine coolant	○ After Starting						
	Tighten all major nuts and bolts							●
	Adjust intake / exhaust valve clearance		○					●
Miscellan e- ous Items	Check the remote control cables	○	○					●
	Adjust the propeller shaft alignment		○					●

* *For EPA requirements, see Inspection and Maintenance of Emission-Related Parts on page 56 .*

Note: These procedures are considered normal maintenance and are performed at the owner's expense.

Inspection and Maintenance of Emission-Related Parts

- Marine Compression-Ignition (CI) engines less than 37 kW (50 hp) are certified by EPA and ARB.
- Marine CI engines of 37 kW (50 hp) or greater are certified by EPA.

Inspection and Maintenance of Emission-Related Parts of Marine CI Engines

Parts	Minimum Interval
Clean fuel injection nozzle	1500 hours
Check fuel injection nozzle pressure and spray pattern	3000 hours
Check fuel injection pump adjustment	
Check turbocharger adjustment (if equipped)	
Check electronic engine control unit and its associated sensors and actuators (if equipped)	

Note: Yanmar recommends that the inspection and maintenance items shown above be performed at an authorized Yanmar dealer or distributor.

PERIODIC MAINTENANCE PROCEDURES

⚠ WARNING

Exposure Hazard.

Always wear personal protective equipment when performing periodic maintenance procedures.

Daily Checks

Before you head out for the day, make sure the Yanmar engine is in good operating condition.

NOTICE

It is important to perform the daily checks as listed in this Operation Manual. Periodic maintenance prevents unexpected downtime, reduces the number of accidents due to poor engine performance and helps extend the life of the engine.

Make sure you check the following items.

Visual Checks

1. Check for engine oil leaks.
2. Check for fuel leaks.

⚠ WARNING

Piercing Hazard.

Avoid skin contact with the high-pressure diesel fuel spray caused by a fuel system leak, such as a broken fuel injection line. High-pressure fuel can penetrate your skin and result in serious injury. If you are exposed to high-pressure fuel spray, obtain prompt medical treatment.

Never check for a fuel leak with your hands.
Always use a piece of wood or cardboard. Have your authorized Yanmar Marine dealer or distributor repair any damage.

3. Check for engine coolant leaks.
4. Check for damaged or missing parts.
5. Check for loose, missing or damaged fasteners.
6. Check the electrical harnesses for cracks, abrasions, and damaged or corroded connectors.
7. Check hoses for cracks, abrasions, and damaged, loose or corroded clamps.
8. Check the fuel filter / water separator for presence of water and contaminants. If you find any water or contaminants, drain the fuel filter / water separator. *See Draining Fuel Filter / Water Separator on page 63*. If you have to drain the fuel filter / water separator frequently, drain the fuel tank and check for the presence of water in your fuel supply. *See Draining the Fuel Tank on page 59*.

NOTICE

If any problem is noted during the visual check, the necessary corrective action should be taken before operating the engine.

Check Diesel Fuel, Engine Oil and Engine Coolant Levels

Follow the procedures in *Diesel Fuel on page 24* , *Engine Oil on page 29* and *Engine Coolant on page 32* to check these levels.

Checking and Refilling Marine Gear Oil

Refer to the *Operation Manual* for the marine gear.

Checking the Battery Electrolyte Level

Check the battery electrolyte level before use. *See Checking the Battery Electrolyte Level (Serviceable Batteries Only) on page 64.*

Checking the Alternator Belt

Check the belt tension before use. *See Checking and Adjusting the Alternator V-ribbed belt Tension on page 60*.

Checking the Remote Control Handle

Check the operation of the remote control handle and ensure it moves smoothly. If it is hard to operate, grease the joints of the remote control cable and lever bearings. If the lever is too loose, adjust the remote control cable. *See Checking and Adjusting the Remote Control Cables on page 61*.

Checking the Alarm Indicators

When operating the start switch on the instrument panel, check that there is no alarm message on the display and the alarm indicators work normally. *See Control Equipment on page 16*.

Preparing Fuel, Oil and Coolant in Reserve

Prepare sufficient fuel for the days operation. Always store engine oil and coolant in reserve (for at least one refill) onboard, to be ready for emergencies.

After Initial 50 Hours of Operation

Perform the following maintenance after the initial 50 hours of operation.

- **Draining the Fuel Tank**
- **Changing the Engine Oil and Replacing the Engine Oil Filter Element**
- **Changing the Marine Gear Oil and Replacing the Marine Gear Oil Filter (If Equipped)**
- **Checking and Adjusting the Alternator V-ribbed belt Tension**
- **Inspecting and Adjusting Intake / Exhaust Valve Clearance**
- **Checking and Adjusting the Remote Control Cables**
- **Adjusting Propeller Shaft Alignment**

Draining the Fuel Tank

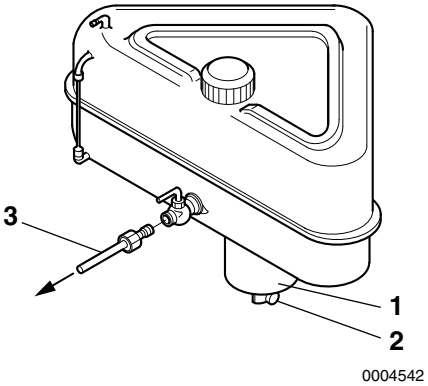

Figure 1

1 – Sediment Bowl
2 – Drain Cock
3 – Fuel Line to Engine

Note: Optional fuel tank shown. Actual equipment may differ.

1. Put a pan under the drain cock **(Figure 1, (2))** to catch fuel.
2. Open the drain cock and drain water and sediment. Close the drain cock when the fuel is clean and free of air bubbles.

Changing the Engine Oil

The engine oil on a new engine becomes contaminated from the initial break-in of internal parts. It is very important that the initial oil replacement is performed as scheduled.

It is easiest and most arailable to drain the engine oil after operation while the engine is still warm.

⚠ WARNING

Burn Hazard.

***If* you must drain the engine oil while it is still hot, stay clear of the hot engine oil to avoid being burned. Always wear eye protection.**

1. Turn the engine off.
2. Remove the engine oil dipstick. Attach the oil drain pump (if equipped) and pump out the oil.
   For easier draining, remove the engine oil fill cap. Dispose of used oil properly.

NOTICE

- Prevent dirt and debris from contaminating engine oil. Carefully clean the dipstick and the surrounding area before removing the dipstick.
- Always be environmentally responsible.

3. Fill with new engine oil. *See Adding Engine Oil on page 30*.

NOTICE

Never mix different types of engine oil. This may adversely affect the lubricating properties of the engine oil.
Never overfill.
Overfilling may result in white smoke, engine overspeed or internal damage.

4. Perform a trial run and check for oil leaks.
5. Approximately 10 minutes after stopping the engine, remove the oil dipstick and check the oil level. Add oil if the level is too low.

Replacing the Engine Oil Filter Element

1. Turn the engine off.
2. Turn the engine oil filter **Figure 2** counterclockwise with a wrench.
3. Remove the engine oil filter.

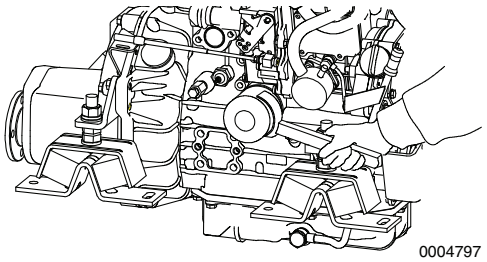

Figure 2

Note: 3YM20 shown.

4. Install a new filter element and hand-tighten until the seal touches the housing.
5. Turn filter an additional 3/4 turn using a box wrench. Tighten to 20 to 24 N·m (177 to 212 lb-in.).
6. Perform a trial run and check for oil leaks.

Changing the Marine Gear Oil

Note: Refer to the Marine Gear Operation Manual for procedure.

During initial operation, the oil is quickly contaminated due to the initial wear of internal parts. The marine gear oil must therefore be replaced early.

1. Remove cap from the filler port and attach an oil drain pump. Drain marine gear oil.
2. Fill marine gear with clean marine gear oil. *See Marine Gear Oil Specifications on page 31*.
3. Perform a trial run and check for oil leaks.
4. Approximately 10 minutes after stopping the engine, remove the oil dipstick and check the oil level. Add oil if the level is too low.

Checking and Adjusting the Alternator V-ribbed belt Tension

⚠ WARNING

Sever Hazard.

Perform this check with the power switch off and the battery switch turned off to avoid contact with moving parts.

NOTICE

Never get any oil on the belt(s). Oil on the belt causes slipping and stretching. Replace the belt if it is damaged.

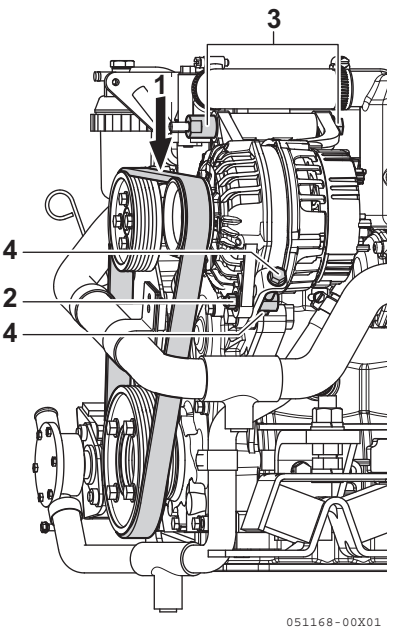

Figure 3

1 – Middle of V-ribbed Belt
2 – Alternator Bolt
3 – Alternator Bolt
4 – Alternator Adjusting Bolt

Note: 3YM30AE shown.

1. Remove the belt cover.
2. Check the belt by pushing on the middle of the belt **(Figure 3, (1))** with your finger.

   With proper tension, the belt should deflect 8 to 10 mm (approximately 3/8 in.).
3. Loosen the 3 bolts of alternator **(Figure 3, (2) (3) (4))**.
4. Screw in the adjusting bolt **(Figure 3, (4))** and move the alternator to adjust the belt tension properly.
5. Tighten the 3 bolts of the alternator.
6. Install the belt cover.

Inspecting and Adjusting Intake / Exhaust Valve Clearance

Proper adjustment is necessary to maintain the correct timing for opening and closing the valves. Improper adjustment will cause the engine to run noisily, resulting in poor engine performance and engine damage. Consult authorized Yanmar Marine dealer or distributor to adjust the intake / exhaust valve clearance.

Checking and Adjusting the Remote Control Cables

NOTICE

Never adjust the high-speed stop bolt **(Figure 4, (4))** on the governor. This will void the engine warranty.

The various control levers on the engine side are connected to the remote control lever by remote control cables. The cables will become stretched and the attachments loose after long hours of operation. It is dangerous to control operation under these conditions, and the remote control cables must be checked and adjusted periodically.

Adjusting the Throttle Remote Control Cable

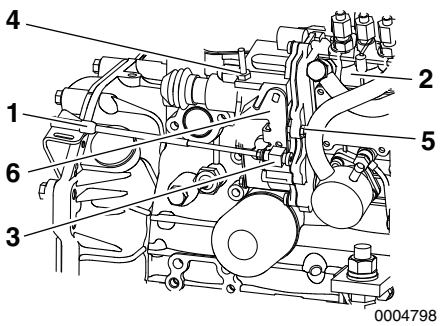

Figure 4

1 – Cable
2 – Fuel Injection Pump
3 – Adjustment
4 – High-Speed Stop Bolt
5 – Low-Speed Stop Bolt
6 – Control Lever

1. Check that the control lever on the engine side moves to the high-speed stop position and low-speed stop position when the remote control lever is moved to H (high speed) and L (low speed) respectively.
2. When there is deviation, loosen the bracket for the remote control cable on the engine side and adjust.
3. Adjust the high-speed stop position first and then adjust the low-speed idling using the adjustment bolt on the remote control lever.

Adjusting Clutch Remote Control Cable

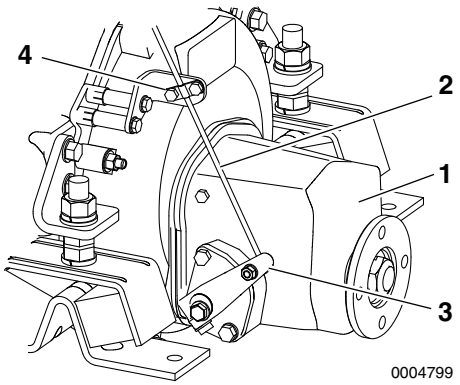

Figure 5

1 – Marine Gear
2 – Control Cable
3 – Control Lever
4 – Bracket (cable)

1. Check that the control lever **(Figure 5, (3))** moves to the correct position when the remote control cable handle is moved to the NEUTRAL, FORWARD and REVERSE positions.
2. Use the NEUTRAL position as the standard for adjustment. When there is deviation, loosen the bracket **(Figure 5, (4))** for the remote control cable on the clutch side and adjust.

Adjusting Propeller Shaft Alignment

The flexible engine mounts are compressed slightly during initial engine operation and may cause misalignment between the engine and the propeller shaft.

After the first 50 hours of operation, the alignment should be checked and readjusted if necessary. This is considered normal maintenance and the adjustment requires specialized knowledge and techniques. Consult your authorized Yanmar Marine dealer or distributor.

Every 50 Hours of Operation

When completing the initial 50 hour maintenance procedures, perform the following procedures every 50 hours thereafter or monthly, whichever comes first.

- **Draining Fuel Filter / Water Separator**
- **Checking the Battery Electrolyte Level**

Draining Fuel Filter / Water Separator

⚠ WARNING

Fire and Explosion Hazard.

When removing any fuel system component to perform maintenance (such as changing the fuel filter), put an approved container under the opening to catch the fuel.
Never use a shop rag to catch the fuel. Vapors from the rag are flammable and explosive. Wipe up any spills immediately.

Exposure Hazard.

Wear eye protection. The fuel system is under pressure and fuel could spray out when removing any fuel system component.

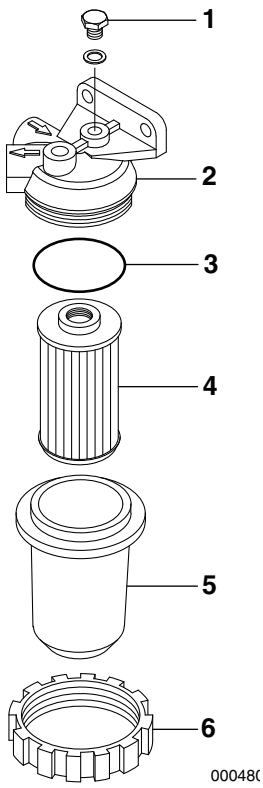

Figure 6

1 – Air Bleed Screw
2 – Bracket
3 – O-Ring
4 – Fuel Filter Element
5 – Fuel Filter Housing
6 – Retaining Ring

1. Close the fuel cock of the fuel tank.
2. Put a pan under the fuel / water separator.
3. Loosen the retaining ring **(Figure 6, (6))**, remove the filter housing **(Figure 6, (5))** and drain off any water or sediment collected inside.
4. After draining, tighten the air bleed screw **(Figure 6, (1))**.

5. Be sure to bleed air from the fuel system. *See Bleeding the Fuel System on page 28*.

Checking the Battery Electrolyte Level (Serviceable Batteries Only)

Never operate with insufficient battery electrolyte. Operating with insufficient electrolyte will destroy the battery.

⚠ WARNING

Exposure Hazard.

Batteries contain sulfuric acid. Never allow battery fluid to come in contact with clothing, skin or eyes. Severe burns could result. Always wear safety goggles and protective clothing when servicing the battery. If battery fluid contacts the eyes and / or skin, immediately flush the affected area with a large amount of clean water and obtain prompt medical treatment.

NOTICE

Never turn off the battery switch (if equipped) or short the battery cables during operation. Damage to the electrical system will result.

Battery fluid tends to evaporate in high temperatures, especially in summer. In such conditions, inspect the battery earlier than specified.

---

1. Make sure the engine is off.
2. Turn the battery switch to OFF (if equipped) or disconnect the negative (-) battery cable.
3. Remove the plugs and check the electrolyte level in all cells.

NOTICE

Never attempt to remove the covers or fill a maintenance-free battery.

---

4. If the electrolyte level is lower than the minimum fill level **(Figure 7, (1))**, fill with distilled water **(Figure 7, (2))** (available locally) up to the upper limit **(Figure 7, (3))** of the battery.

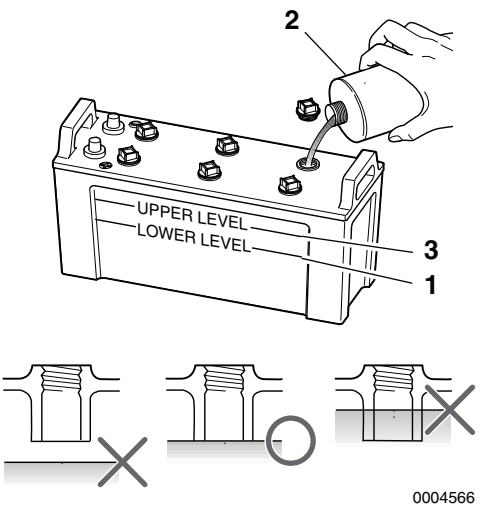

Figure 7

1 – Lower Level
2 – Distilled Water
3 – Upper Level

Note: The maximum fill level is approximately 10 to 15 mm (3/8 to 9/16 in.) above the plates.

Every 100 Hours of Operation

Perform the following maintenance every 100 hours or every 6 months of operation, whichever comes first.

- **Changing the Sail Drive Gear Oil**

Changing the Sail Drive Gear Oil

Refer to the *Sail Drive Operation Manual* for the procedure for changing gear oil.

Every 150 Hours of Operation

Perform the following maintenance every 150 hours or every year of operation, whichever comes first.

- **Changing the Engine Oil**

Changing the Engine Oil

See Changing the Engine Oil on page 59.

Every 250 Hours of Operation

Perform the following maintenance every 250 hours or 1 year of operation, whichever comes first.

- **Draining the Fuel Tank**
- **Replacing the Fuel Filter Element**
- **Replacing the Engine Oil Filter Element**
- **Changing the Marine Gear Oil**
- **Checking or Replacing the Seawater Pump Impeller**
- **Replacing the Coolant**
- **Cleaning the Intake Silencer (Air Cleaner) Element**
- **Cleaning or Replacing the Exhaust / Water Mixing Elbow**
- **Adjusting the Alternator V-ribbed belt Tension**
- **Cleaning the Breather Pipe**
- **Checking the Wiring Connectors**

Draining the Fuel Tank

See Draining the Fuel Tank on page 59.

Replacing the Fuel Filter Element

⚠ WARNING

Fire and Explosion Hazard.

When removing any fuel system component to perform maintenance (such as changing the fuel filter), put an approved container under the opening to catch the fuel.
Never use a shop rag to catch the fuel. Vapors from the rag are flammable and explosive. Wipe up any spills immediately.

Exposure Hazard.

Wear eye protection. The fuel system is under pressure and fuel could spray out when removing any fuel system component.

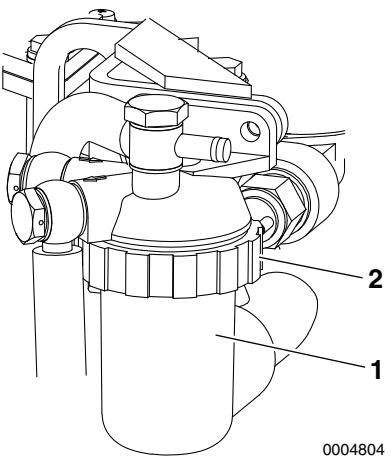

Figure 8

1 – Housing
2 – Retaining Ring

When there is dirt in the fuel, the filter becomes clogged and the fuel will not flow easily. Check and replace the element.

1. Close the fuel cock of the fuel tank.
2. Place an approved container under the fuel filter.
3. Remove the filter case by loosening the retaining ring **(Figure 8, (2))**. Turn the ring counterclockwise using a filter wrench.
4. Remove the housing **(Figure 8, (1))** and remove the element. Replace the element with a new one.
5. Apply a thin film of clean diesel fuel to the sealing surface of the new filter gasket.
6. Clean the inside of the housing thoroughly, install the O-ring and hand-tighten the retainer ring. Use a filter wrench and tighten to 12 N·m (106 in.-lb).
7. Air will enter the fuel system when the filter is disassembled. Bleed the fuel system to remove any air from the system. *See Bleeding the Fuel System on page 28*.
8. Dispose of waste properly.

Replacing the Engine Oil Filter Element

See Replacing the Engine Oil Filter Element on page 60.

Changing the Marine Gear Oil

See Changing the Marine Gear Oil on page 60.

Checking or Replacing the Seawater Pump Impeller

1. Loosen side cover bolts and remove the side cover.
2. Inspect the inside of the seawater pump with a flashlight. If any of the following are found, service the seawater pump:
   - Impeller blades are cracked or nicked. Edges or surfaces of the blades are marred or scratched.
   - Wear plate is damaged.
3. If no damage is found when inspecting the inside of the pump, install the O-ring and side cover.
4. If a large amount of water leaks continuously from the water drain line below the seawater pump during operation, replace the mechanical seal. Consult authorized Yanmar Marine dealer or distributor.

When disassembly and maintenance of the seawater pump are necessary, consult your Yanmar Marine dealer or distributor.

The seawater pump turns in the direction as shown in **Figure 9**. The impeller must be installed while considering the impeller direction.

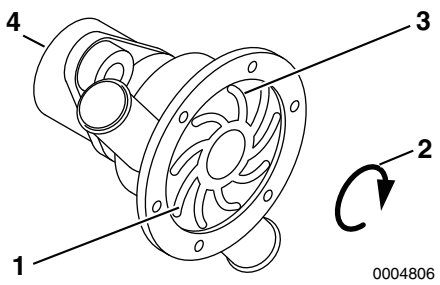

Figure 9

1 – Impeller Vane Direction
2 – Impeller Rotating Direction
3 – Impeller
4 – Seawater Pump

Replacing the Coolant

⚠ CAUTION

Coolant Hazard.

Wear eye protection and rubber gloves when you handle engine coolant. If contact with the eyes or skin should occur, flush eyes and wash immediately with clean water.

Replace coolant every year.

Note: If Long Life Coolant (LLC) is used, replace coolant every 2 years.

Note: The drain cocks are opened before shipping from the factory. Close all drain cocks before filling the system with coolant.

1. Put a pan under the coolant drain cocks.
2. Open all coolant drain cocks.
3. Allow to drain completely. Dispose of waste properly.
4. Close all the drain cocks.
5. Fill coolant tank and reservoir with appropriate coolant. *See Engine Oil Specifications on page 29* and *see Checking and Adding Coolant on page 33* .

Cleaning the Intake Silencer (Air Cleaner) Element

1. Disassemble the intake silencer (air cleaner).
2. Remove element **(Figure 10, (1))**. Clean element and housing with a neutral detergent.
3. Dry completely and reassemble.

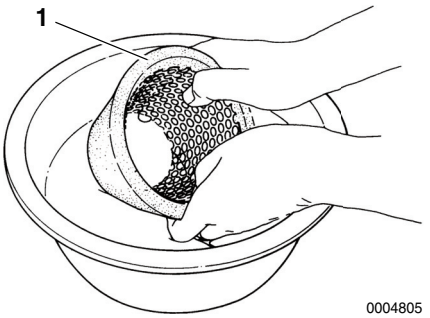

Figure 10

Cleaning or Replacing the Exhaust / Water Mixing Elbow

There are two types of mixing elbows, the L-type and the U-type. The mixing elbow is attached to the exhaust manifold. The exhaust gas is mixed with seawater in the mixing elbow.

1. Remove the mixing elbow.
2. Clean dirt and scale out of the exhaust and seawater passages.
3. If the mixing elbow is damaged, repair or replace it. Consult authorized Yanmar Marine dealer or distributor.
4. Inspect the gasket and replace if necessary.

Replace the mixing elbow with a new one every 500 hours or 2 years, whichever comes first, even if no damage is found.

Consult authorized Yanmar Marine dealer or distributor.

Adjusting the Alternator V-ribbed belt Tension

See Checking and Adjusting the Alternator V-ribbed belt Tension on page 60.

Cleaning the Breather Pipe

Consult authorized Yanmar Marine dealer or distributor.

Checking the Wiring Connectors

Consult authorized Yanmar Marine dealer or distributor.

Every 1000 Hours of Operation

Perform the following maintenance every 1000 hours or 4 years of operation, whichever comes first.

- **Checking the Fuel Injection Timing**
- **Checking the Fuel Injector Spray Pattern**
- **Replacing the Seawater Pump Impeller**
- **Cleaning and Checking the Seawater Passages**
- **Checking the Diaphragm Assembly**
- **Replacing the Alternator V-ribbed belt**
- **Adjusting Intake / Exhaust Valve Clearance**
- **Checking and Adjusting the Remote Control Cables**
- **Adjusting the Propeller Shaft Alignment**
- **Tightening All Major Nuts and Bolts**

Checking the Fuel Injection Timing

Consult authorized Yanmar Marine dealer or distributor.

Checking the Fuel Injector Spray Pattern

Consult authorized Yanmar Marine dealer or distributor.

Replacing the Seawater Pump Impeller

The seawater impeller must be replaced every 1000 hours or every 4 years even if it is not damaged.

See Checking or Replacing the Seawater Pump Impeller on page 67.

Cleaning and Checking the Seawater Passages

After prolonged use, clean the seawater passages to remove dirt, scale, rust and other contaminants that collect in the coolant passages. This can cause poor engine cooling. Inspect these items:

- Heat Exchanger
- Pressure Cap

Consult authorized Yanmar Marine dealer or distributor.

Checking the Diaphragm Assembly

Inspect the diaphragm assembly on the rocker arm cover.

1. Loosen screws and remove diaphragm assembly.
2. Check for oil and contaminants between the diaphragm and cover.

NOTICE

If oil and contaminants enter the diaphragm assembly, the diaphragm will not operate properly.

3. Inspect the diaphragm rubber and spring for damage. If necessary, replace with new ones.

Breather System Components

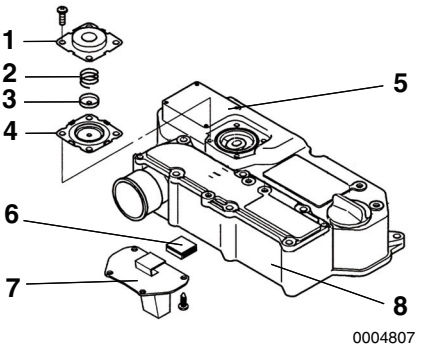

Figure 11

1 – Diaphragm Cover
2 – Spring
3 – Center Plate
4 – Diaphragm
5 – Rocker Arm Cover
6 – Breather Baffle
7 – Baffle Plate
8 – Intake Silencer (air cleaner)

Replacing the Alternator V-ribbed belt

1. Remove the V-ribbed belt cover.
2. Loosen the V-ribbed belt tension adjusting bolt of the alternator.
3. Remove the alternator V-ribbed belt.
4. Install a new alternator V-ribbed belt.
5. Adjust the alternator V-ribbed belt tension. *See Checking and Adjusting the Alternator V-ribbed belt Tension on page 60*.
6. Replace the V-ribbed belt cover.

Adjusting Intake / Exhaust Valve Clearance

Consult authorized Yanmar Marine dealer or distributor.

Checking and Adjusting the Remote Control Cables

See Checking and Adjusting the Remote Control Cables on page 61.

Adjusting the Propeller Shaft Alignment

Consult authorized Yanmar Marine dealer or distributor.

Tightening All Major Nuts and Bolts

See Tightening Fasteners on page 50 or consult authorized Yanmar Marine dealer or distributor.

This Page Intentionally Left Blank

TROUBLESHOOTING

SAFETY PRECAUTIONS

Before performing any troubleshooting procedures within this section, review the *Safety section on page 3*.

If a problem occurs, stop the engine immediately. Refer to the Symptom column in the Troubleshooting Chart to identify the problem.

TROUBLESHOOTING AFTER STARTING

Just after the engine has started, check the following items at a low engine speed:

Is sufficient water being discharged from the seawater outlet pipe?

If the discharge is low, stop the engine immediately. Identify the cause and repair.

Is the smoke color normal?

The continuous emission of black exhaust smoke indicates engine overloading. This shortens the engines life and should be avoided.

Are there abnormal vibrations or noise?

Depending on the hull structure, engine and hull resonance may suddenly increase at certain engine speed ranges, causing heavy vibrations. Avoid operation in this speed range. If any abnormal sounds are heard, stop the engine and inspect for cause.

Alarm sounds during operation.

If the alarm sounds during operation, lower the engine speed immediately, check the warning lamps and stop the engine for repairs.

Is there water, oil or fuel leakage? Are there any loose bolts or connections?

Check the engine room daily for any leaks or loose connections.

Is there sufficient fuel in the fuel tank?

Refill fuel in advance to avoid running out of fuel. If the tank runs out of fuel, bleed the fuel system. *See Bleeding the Fuel System on page 28*.

When operating the engine at low speed for long periods of time, race the engine once every 2 hours. Racing the engine with the clutch in NEUTRAL, accelerate from the low-speed position to the high-speed position and repeat this process about five times. This is done to clean out carbon from the cylinders and the fuel injection valves.

NOTICE

Neglecting to race the engine will result in poor smoke color and reduce engine performance.

Periodically operate the engine near maximum speed while underway. This will generate higher exhaust temperatures, which will help clean out hard carbon deposits, maintain engine performance and prolong the life of the engine.

TROUBLESHOOTING INFORMATION

If the engine does not operate properly, refer to the *Troubleshooting Chart on page 75* or consult authorized Yanmar Marine dealer or distributor.

Supply the authorized Yanmar Marine dealer or distributor with the following information:

- Model name and serial number of your engine
- Boat model, hull material, size (tons)
- Use, type of boating, number of hours run
- Total number of operation hours (refer to hourmeter), age of boat
- The operating conditions when the problem occurs:
  - Engine speed (min^{-1})
  - Color of exhaust smoke
  - Type of diesel fuel
  - Type of engine oil
  - Any abnormal noises or vibration
  - Operating environment such as high altitude or extreme ambient temperatures, etc.
  - Engine maintenance history and previous problems
  - Other factors that contribute to the problem

TROUBLESHOOTING CHART

Symptom	Probable Cause	Measure	Reference
Indicators light on the instrument panel and alarm sounds during operation	Shift to low-speed operation immediately, and check which indicator has come on. Stop the engine and inspect. If no abnormality is identified and there is no problem with operation, return to port at lowest speed and consult authorized Yanmar Marine dealer or distributor.		
Engine oil low pressure alarm indicator lights	Engine oil level is low.	Check engine oil level. Add or replace as necessary.	*See Checking the Engine Oil on page 30.*
	Engine oil filter is clogged.	Replace engine oil filter. Replace engine oil.	*See Changing the Engine Oil on page 59.*
Water in sail drive seal indicator lights	Rubber sail drive seal is broken.	Consult authorized Yanmar Marine dealer or distributor.	-
Coolant high temperature alarm lights	Coolant in coolant tank / heat exchanger is low.	Check coolant level and refill.	*See Checking and Adding Coolant on page 33.*
	Insufficient seawater level causing temperature to rise.	Check seawater system.	-
	Contamination inside cooling system.	Consult authorized Yanmar Marine dealer or distributor.	-
Faulty Warning Devices	Do not operate the engine if alarm devices are not repaired. See you authorized Yanmar Marine dealer or distributor. Serious accidents may result if abnormalities are not identified due to faulty indicators or alarm.		
Indicators Do Not Go On:			
The tachometer does not turn on, even though the power switch is turned on	No electrical current available. The battery switch is turned off, the fuse (3 A) on the instrument panel is burned out or the circuit is broken.	Consult authorized Yanmar Marine dealer or distributor.	-
One of the indicators does not go out	Sensor switch is faulty.	Consult authorized Yanmar Marine dealer or distributor.	-
Battery low charge indicator does not go out during operation	V-ribbed belt is loose or broken.	Replace V-ribbed belt or adjust tension.	*See Checking and Adjusting the Alternator V-ribbed belt Tension on page 60.*
	Battery is defective.	Check battery fluid level, specific gravity or replace battery.	*See Checking the Battery Electrolyte Level on page 58.*
	Alternator power generation failure.	Consult authorized Yanmar Marine dealer or distributor.	-
Starting Failures:			
Starter turns but engine does not start	No fuel.	Add fuel. Bleed fuel system.	*See Filling the Fuel Tank on page 27* and *see Bleeding the Fuel System on page 28 .*
	Fuel filter is clogged.	Replace filter element.	*See Replacing the Fuel Filter Element on page 66.*
	Improper fuel.	Replace with recommended fuel.	*See Diesel Fuel Specifications on page 24.*
	Problem with fuel injection.	Consult authorized Yanmar Marine dealer or distributor.	-
	Compression leakage from intake / exhaust valve.	Consult authorized Yanmar Marine dealer or distributor.	-

Symptom	Probable Cause	Measure	Reference
Starter does not turn or turns slowly (engine can be turned manually)	Faulty clutch position.	Shift to NEUTRAL and start.	*See If the Engine Fails to Start on page 40.*
	Insufficient battery charge.	Check fluid level. Recharge or replace battery.	*See Checking the Battery Electrolyte Level on page 58.*
	Cable terminal contact failure.	Remove corrosion from terminals. Tighten battery cables.	-
	Faulty safety switch device.	Consult authorized Yanmar Marine dealer or distributor.	-
	Faulty starter switch.	Consult authorized Yanmar Marine dealer or distributor.	-
	Power lacking due to accessory drive being engaged.	Consult authorized Yanmar Marine dealer or distributor.	-
Engine cannot be turned manually	Internal parts seized.	Consult authorized Yanmar Marine dealer or distributor.	-
Abnormal Exhaust Color:			
Black smoke	Load increased.	Consult authorized Yanmar Marine dealer or distributor.	-
	Improper propeller matching.	Consult authorized Yanmar Marine dealer or distributor.	-
	Dirty intake silencer (air cleaner).	Clean element.	*See Cleaning the Intake Silencer (Air Cleaner) Element on page 68.*
	Improper fuel.	Replace with recommended fuel.	*See Diesel Fuel Specifications on page 24.*
	Faulty spraying of fuel injector.	Consult authorized Yanmar Marine dealer or distributor.	-
	Incorrect intake / exhaust valve clearance.	Consult authorized Yanmar Marine dealer or distributor.	-
White smoke	Improper fuel.	Replace with recommended fuel.	*See Diesel Fuel Specifications on page 24.*
	Faulty spraying of fuel injector.	Consult authorized Yanmar Marine dealer or distributor.	-
	Fuel injection timing off.	Consult authorized Yanmar Marine dealer or distributor.	-
	Excessive diesel fuel consumption.	Consult authorized Yanmar Marine dealer or distributor.	-

LONG-TERM STORAGE

If the engine will not be used for an extended period of time, special measures should be taken to protect the cooling system, fuel system and combustion chamber from corrosion and the exterior from rusting.

The engine can normally stand idle for up to 6 months. If it remains unused for longer than this, please consult your authorized Yanmar Marine dealer or distributor.

Before performing any storage procedures within this section, review the *Safety* section on page *3*.

In cold temperatures or before long-term storage, be sure to drain the seawater from the cooling system.

NOTICE

Do not drain the coolant system. A full coolant system will prevent corrosion and frost damage.

If seawater is left inside of the engine, it may freeze and damage parts of the cooling system when the ambient temperature is below 0°C (32°F).

PREPARE ENGINE FOR LONG-TERM STORAGE

Note: If the engine is close to a periodic maintenance interval, perform those maintenance procedures before putting the engine into long-term storage.

1. Wipe off any dust or oil from the outside of engine.
2. Drain water from fuel filters.
3. Drain fuel tank completely or fill the tank to prevent condensation.
4. Grease the exposed areas and joints of the remote control cables and the bearings of the remote control handle.
5. Seal the intake silencer, exhaust pipe, etc. to prevent moisture or contamination from entering engine.
6. Completely drain bilge in hull bottom.
7. Waterproof the engine room to prevent rain or seawater from entering.
8. Charge the battery once a month to compensate for battery's self-discharge.
9. Make sure the power switch is off.

DRAIN SEAWATER COOLING SYSTEM

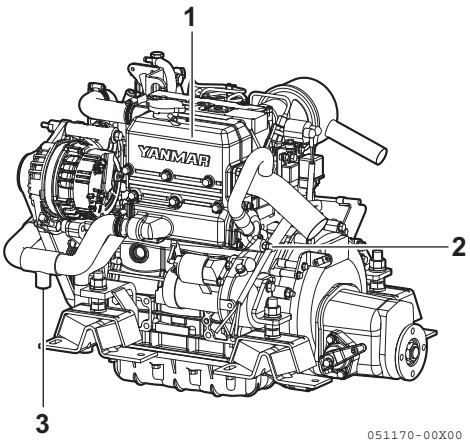

Figure 1

1 – Coolant Tank / Heat Exchanger
2 – Seawater Drain Cock
3 – Coolant Drain Plug

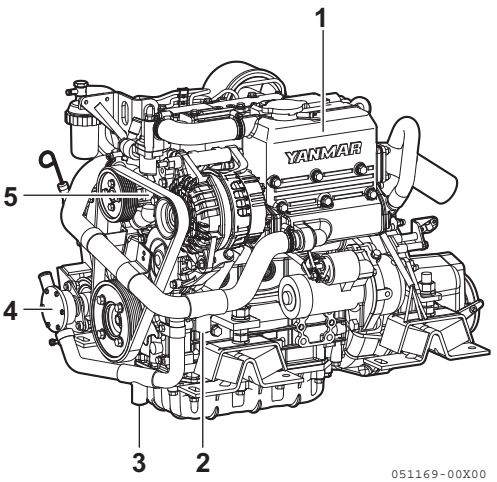

Figure 2

1 – Coolant Tank / Heat Exchanger
2 – Coolant Drain Plug
3 – Seawater Drain Plug
4 – Seawater Pump
5 – Coolant Pump

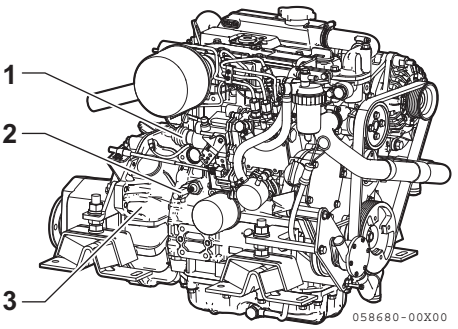

Figure 3

1 – Stop Solenoid
2 – Coolant Drain Cock
3 – Flywheel Housing

Figure 4

Note: The drain cocks are opened before shipping from the factory. Close all drain cocks before filling the system with coolant.

NOTICE

If seawater is left inside, it may freeze and damage parts of the cooling system (heat exchanger, seawater pump, etc.) when ambient temperature is below 0 °C (32 °F).

1. Put a pan under the seawater drain cocks.
2. Open the seawater drain cocks on the pipe and on the heat exchanger. Allow to drain.
3. Remove the four bolts fastening the side cover of the seawater pump. Remove the cover and drain the seawater.
4. Install the cover and tighten bolts.
5. Close all drain cocks.

NOTICE

Never drain engine coolant in the cold season or before long storage. If LLC (Long Life Coolant) has not been added to the cooling system, add LLC or drain the coolant from the coolant system after daily use. If the coolant without LLC is not removed, it may freeze and damage parts of the cooling system or engine when ambient temperature is below 0 °C (32 °F).

This Page Intentionally Left Blank

SPECIFICATIONS

PRINCIPAL ENGINE SPECIFICATIONS

2YM15 Engine Specifications

Specification		2YM15	
Marine Gear Model		KM2P-1	SD25
Use		Pleasure use	
Type		Vertical water cooled 4-cycle diesel engine	
Combustion System		Swirl pre-combustion chamber	
Air Charging		Natural aspiration	
Number of Cylinders		2	
Bore x Stroke		70 mm x 74 mm (2.76 in. x 2.91 in.)	
Displacement		0.570 L (34.8 cu in.)	
Continuous Power	Output at Crankshaft / Engine Speed	9.1 kW (12.4 hp metric) / 3489 min^{-1}	
Fuel Stop Power	Output at Crankshaft / Engine Speed	10.0 kW (13.6 hp metric) / 3600 min^{-1}*	
	Output at Propeller / Engine Speed	9.7 kW (13.2 hp metric) / 3600 min^{-1}**	-
Installation		Flexible mounting	
Fuel Injection Timing		FID 21 ±1° BTDC	
Fuel Injection Opening Pressure		12.3 to 13.28 MPa	
Main Power Take Off		At flywheel end	
Direction of Rotation	Crankshaft	Counterclockwise viewed from stern	
	Propeller Shaft (Ahead)	Clockwise viewed from stern	-
Cooling System		Coolant cooling with heat exchanger	
Lubrication System		Forced lubrication system	
Coolant Capacity		Engine 3.0 L (3.17 qt), Reservoir: 0.8 L (0.85 qt)	
Lubricating Oil Capacity (Engine)	Rake Angle	at rake angle 8°	at rake angle 0°
	Total**	2.0 L (2.1 qt)	1.8 L (1.9 qt)
	Effective***	0.95 L (1.0 qt)	0.9 L (0.95 qt)
Starting System	Type	Electric	
	Starting Motor	DC 12 V - 1.4 kW	
	AC Alternator	12 V - 120 A	
Engine Dimension	Overall Length	616 mm (24.3 in.)	-
	Overall Width	485 mm (19.1 in.)	
	Overall Height	528 mm (20.8 in.)	
Engine Dry Mass (Including Marine Gear)		113 kg (249 lb)	134 kg (295 lb)

* Rating Condition: Temperature of fuel; 40°C at fuel pump inlet; ISO 8665

** The “total” oil quantity includes oil in oil pan, channels, coolers and filter.

*** The effective amount of oil shows the difference in maximum scale of the dipstick and minimum scale.

Note: Density of fuel: 0.835 to 0.845 g/cm^3 at 15°C. Fuel temperature at the inlet of the fuel injection pump.

1hp metric = 0.7355 kW

3YM20 Engine Specifications

Specification		3YM20	
Marine Gear Model		KM2P-1	SD25
Use		Pleasure use	
Type		Vertical water cooled 4-cycle diesel engine	
Combustion System		Swirl pre-combustion chamber	
Air Charging		Natural aspiration	
Number of Cylinders		3	
Bore x Stroke		70 mm x 74 mm (2.76 in. x 2.91 in.)	
Displacement		0.854 L (52.1 cu in.)	
Continuous Power	Output at Crankshaft / Engine Speed	13.9 kW (18.9 hp metric) / 3489 min^{-1}	
Fuel Stop Power	Output at Crankshaft / Engine Speed	15.3 kW (20.8 hp metric) / 3600 min^{-1}*	
	Output at Propeller / Engine Speed	14.9 kW (20.1 hp metric) / 3600 min^{-1}**	-
Installation		Flexible mounting	
Fuel Injection Timing		FID 22 ± 1° BTDC	
Fuel Injection Opening Pressure		12.3 to 13.28 MPa	
Main Power Take Off		At flywheel end	
Direction of Rotation	Crankshaft	Counterclockwise viewed from stern	
	Propeller Shaft (Ahead)	Clockwise viewed from stern	-
Cooling System		Coolant cooling with heat exchanger	
Lubrication System		Forced lubrication system	
Coolant Capacity		Engine 4.1 L (4.33 qt), Reservoir: 0.8 L (0.85 qt)	
Lubricating Oil Capacity (Engine)	Rake Angle	at rake angle 8°	at rake angle 0°
	Total**	2.7 L (2.85 qt)	2.4 L (2.54 qt)
	Effective***	1.4 L (1.48 qt)	1.5 L (1.59 qt)
Starting System	Type	Electric	
	Starting Motor	DC 12 V - 1.4 kW	
	AC Alternator	12 V - 120A	
Engine Dimension	Overall Length	701 mm (27.6 in.)	-
	Overall Width	485 mm (19.1 in.)	
	Overall Height	528 mm (20.8 in.)	
Engine Dry Mass (Including Marine Gear)		130 kg (287 lb)	151 kg (333 lb)

* Rating Condition: Temperature of fuel; 40°C at fuel pump inlet; ISO 8665

** The “total” oil quantity includes oil in oil pan, channels, coolers and filter.

*** The effective amount of oil shows the difference in maximum scale of the dipstick and minimum scale.

Note: Density of fuel: 0.835 to 0.845 g/cm^3 at 15°C. Fuel temperature at the inlet of the fuel injection pump.

1hp metric = 0.7355 kW

3YM30AE Engine Specifications

Specification		3YM30AE	
Marine Gear Model		KM2P-1	SD25
Use		Pleasure use	
Type		Vertical water cooled 4-cycle diesel engine	
Combustion System		Swirl pre-combustion chamber	
Air Charging		Natural aspiration	
Number of Cylinders		3	
Bore x Stroke		80 mm x 84 mm (3.15 in. x 3.31 in.)	
Displacement		1.267 L (77.3 cu in.)	
Continuous Power	Output at Crankshaft / Engine Speed	19.4 kW (26.4 hp metric) / 3101 min^{-1}	
Fuel Stop Power	Output at Crankshaft / Engine Speed	21.3 kW (29.0 hp metric) / 3200 min^{-1}*	
	Output at Propeller / Engine Speed	20.7 kW (28.1 hp metric) / 3200 min^{-1}**	-
Installation		Flexible mounting	
Fuel Injection Timing		FID 17 ±1° BTDC	
Fuel Injection Opening Pressure		12.3 to 13.28 MPa	
Main Power Take Off		At flywheel end	
Direction of Rotation	Crankshaft	Counterclockwise viewed from stern	
	Propeller Shaft (Ahead)	Clockwise viewed from stern	-
Cooling System		Coolant cooling with heat exchanger	
Lubrication System		Forced lubrication system	
Coolant Capacity		Engine 4.9 L (5.2 qt), Reservoir: 0.8 L (0.85 qt)	
Lubricating Oil Capacity (Engine)	Rake Angle	at rake angle 8°	at rake angle 0°
	Total**	2.8 L (2.96 qt)	2.5 L (2.64 qt)
	Effective***	1.4 L (1.48 qt)	1.5 L (1.59 qt)
Starting System	Type	Electric	
	Starting Motor	DC 12 V - 1.4 kW	
	AC Alternator	12 V - 120 A	
Engine Dimension	Overall Length	719 mm (28.3 in.)	-
	Overall Width	485 mm (19.1 in.)	
	Overall Height	545 mm (21.5 in.)	
Engine Dry Mass (Including Marine Gear)		133 kg (293 lb)	157 kg (346 lb)

* Rating Condition: Temperature of fuel; 40°C at fuel pump inlet; ISO 8665

** The “total” oil quantity includes oil in oil pan, channels, coolers and filter.

*** The effective amount of oil shows the difference in maximum scale of the dipstick and minimum scale.

Note: Density of fuel: 0.835 to 0.845 g/cm^3 at 15°C. Fuel temperature at the inlet of the fuel injection pump.

1hp metric = 0.7355 kW

Marine Gear and Sail Drive Specifications

Model		KM2P-1(S)	KM2P-1(G)	KM2P-1(GG)	SD25 (coupled at boat builder)
Type		Mechanical cone clutch			Dog Clutch
Reduction Ratio (Forward / Reverse)		2.21 / 3.06	2.62 / 3.06	3.22 / 3.06	2.64 / 2.64
Propeller Speed (Forward / Reverse)	2YM15, 3YM20 *	1580 / 1140 min^{-1}	1332 / 1140 min^{-1}	1083 / 1140 min^{-1}	1322 / 1322 min^{-1}
	3YM30AE**	1404 / 1015 min^{-1}	1184 / 1015 min^{-1}	-	1174 / 1174 min^{-1}
Lubrication System		Splash			Oil bath
Lubricating Oil Capacity (Total)		0.3 L (0.32 qt)			2.2 L (2.3 qt) Standard 2.5 L (2.6 qt) Long Reach
Lubricating Oil Capacity (Effective)		0.05 L (0.05 qt)			0.15 L (0.16 qt)
Cooling System		Air cooling by fan on flywheel			-
Weight		9.8 kg (21.6 lb)			30 kg (66.1 lb)

*At continuous power engine speed 3489 min^{-1}.

**At continuous power engine speed 3101 min^{-1}.

This Page Intentionally Left Blank

SYSTEM DIAGRAMS

PIPING DIAGRAMS

Piping diagrams and wiring diagrams are provided for reference only. Consult your authorized Yanmar Marine dealer or distributor for the most current diagrams.

Notation	Description
	Screw Joint (Union)
	Flange Joint
	Eye Joint
	Insertion Joint
	Drilled Hole
	Coolant Piping
	Seawater Piping
	Engine Oil Piping
	Diesel Fuel Piping

Notes:

1. Steel pipe shows OD x wall thickness, rubber hose shows ID x wall thickness.
2. Rubber fuel lines meet EN/ISO7840.
3. Unit: mm

2YM15 with KM2P-1 Marine Gear

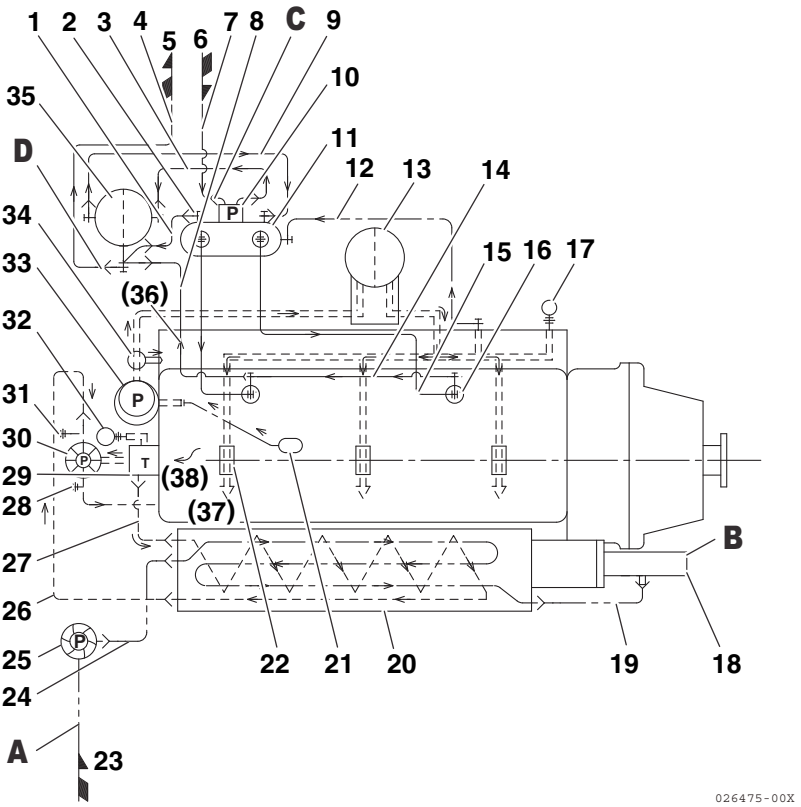

Figure 1

Unit: mm (in.)

Detail of part A	Detail of part B
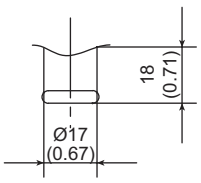	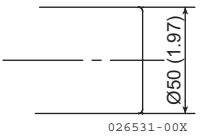
Detail of part C	**Detail of part D**
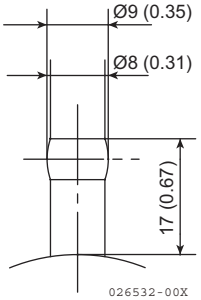	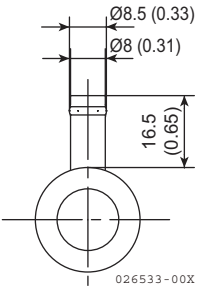

1 – 7.8 x t4.5 Rubber Hose
2 – Check Valve
3 – 7.8 x t4.5 Rubber Hose
4 – 7.8 x t4.5 Rubber Hose
5 – Overflow
6 – Fuel Inlet
7 – 7.8 x t4.5 Rubber Hose
8 – 5 x t4.5 Rubber Hose
9 – 7.8 x t4.5 Rubber Hose
10 – Fuel Feel Pump
11 – Fuel Injection Pump
12 – 4.76 x t0.7 Steel Pipe
13 – Engine Oil Filter (cartridge type)
14 – 4.76 x t0.7 Steel Pipe
15 – Fuel High-Pressure Pipe
16 – Fuel Injection Nozzle
17 – Oil Pressure Switch
18 – Mixing Elbow
19 – 17 x 14 Rubber Hose
20 – Heat Exchanger
21 – Engine Oil Inlet Filter
22 – Main Bearing
23 – Seawater Inlet
24 – 17 x t4 Rubber Hose
25 – Seawater Pump
26 – 28 x t4 Rubber Hose
27 – 28 x t4 Rubber Hose
28 – Hot Water Connection Outlet (R3/8)
29 – Thermostat
30 – Coolant Pump
31 – Hot Water Connection Inlet (R3/8)
32 – Coolant Temperature Switch
33 – Engine Oil Pump
34 – Pressure Control Valve
35 – Diesel Fuel
36 – To Oil Pan
37 – To Camshaft
38 – From Cylinder Head

3YM20 and 3YM30AE with KM2P-1 Marine Gear

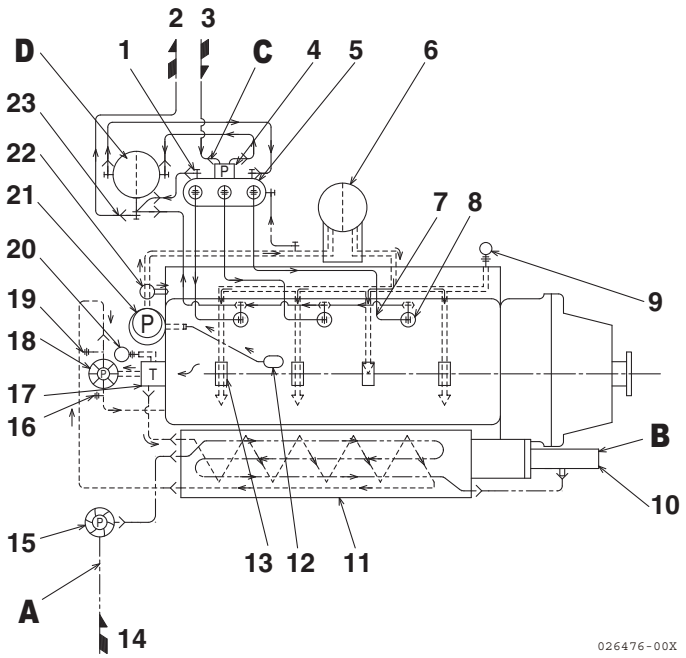

Figure 2

Unit: mm (in.)

Detail of part A	Detail of part B
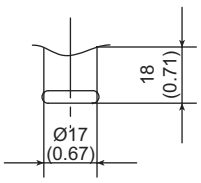	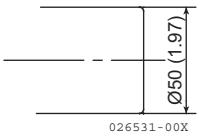
Detail of part C	**Detail of part D**
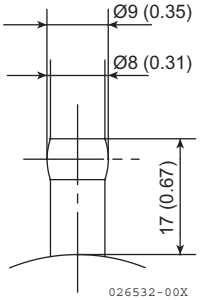	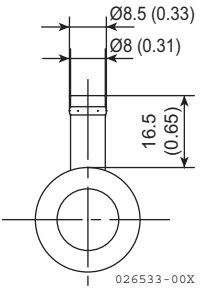

1 – PCV
2 – Overflow
3 – Fuel Inlet
4 – Fuel Feed Pump
5 – Fuel Injection Pump
6 – Engine Oil Filter (cartridge type)
7 – Fuel High-Pressure Pipe
8 – Fuel Injection Nozzle
9 – Oil Pressure Switch
10 – Mixing Elbow
11 – Heat Exchanger
12 – Engine Oil Inlet Filter
13 – Main Bearing
14 – Seawater Inlet
15 – Seawater Pump
16 – Hot Water Connection Outlet
17 – Thermostat
18 – Coolant Pump
19 – Hot Water Connection Inlet
20 – Coolant Temperature Switch
21 – Engine Oil Pump
22 – Pressure Control Valve
23 – Fuel Filter
24 – To Oil Pan
25 – To Camshaft
26 – From Cylinder Head

WIRING DIAGRAMS

Color Coding	
R	Red
B	Black
W	White
L	Blue
RB	Red / Black
LB	Blue / Black
YW	Yellow / White
YG	Yellow / Green
WL	White / Blue
V	Purple
BW	Blue / White
O	Orange
WBr	White / Brown

Allowable Length by Cross Sectional Area of Battery Cable	
Section of Cable mm^2 ($in.^2$)	**Allowable Length L = 1 + 2 + 3 m (ft)**
15 (0.023)	< 0.86 (0.26)
20 (0.031)	< 1.3 (0.40)
30 (0.046)	< 2.3 (0.70)
40 (0.062)	< 2.8 (0.85)
50 (0.077)	< 3.5 (1.07)
60 (0.093)	< 4.1 (1.25)

2YM15, 3YM20, 3YM30AE - B20 Type Instrument Panel

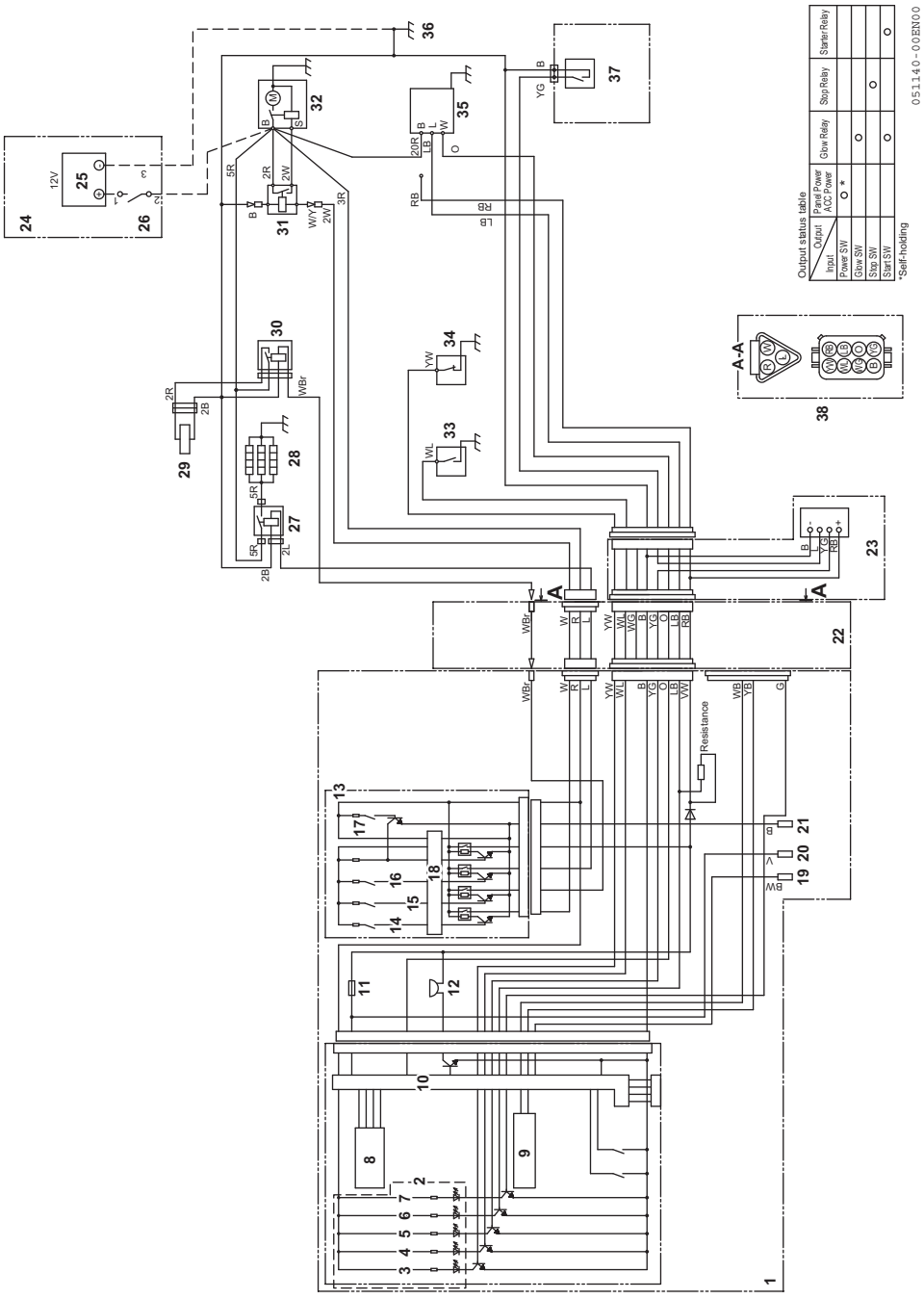

Figure 3

1 – Instrument panel B20
2 – Alarm lamps (3 to 7)
3 – Engine oil low pressure indicator
4 – Coolant high temperature Indicator
5 – Water in sail drive seal indicator
6 – Battery low charge indicator
7 – Water in fuel filter indicator
8 – Tachometer
9 – Segmented display
10 – Control unit (Tacho gauge)
11 – Fuse 3A
12 – Buzzer
13 – Switch module (14 to 18)
14 – Start switch
15 – Stop switch
16 – Glow switch
17 – Power switch
18 – Control unit (Switch module)
19 – Fuel tank level sensor input
20 – ACC power
21 – ACC GND
22 – Wire harness
23 – Water in sail drive seal sensor amplifier (sail drive only)
24 – Procured by customer
25 – Battery
26 – Battery switch
27 – Relay (Glow plug)
28 – Glow plug
29 – Stop relay
30 – Engine stop solenoid
31 – Starter relay
32 – Starter
33 – Coolant temperature switch
34 – Engine oil pressure switch
35 – Alternator
36 – Ground
37 – Water in sail drive seal sensor (Sail drive only)
38 – Details of coupler (Wire harness, view from A-A)

WARRANTY USA ONLY

YANMAR CO., LTD. LIMITED EMISSION CONTROL SYSTEM WARRANTY - USA ONLY

EPA and ARB Emission Control Label for 2YM15

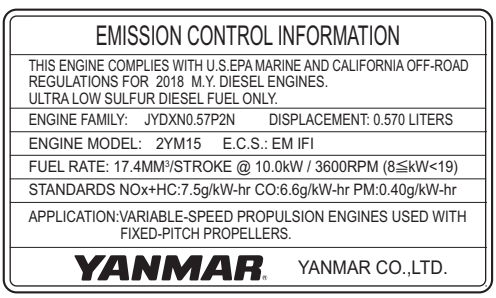

Figure 1

EPA and ARB Emission Control Label for 3YM20

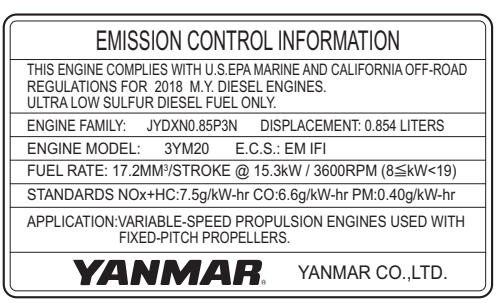

Figure 2

EPA and ARB Emission Control Label for 3YM30AE

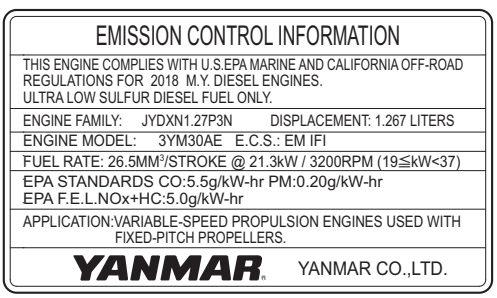

Figure 3

This Page Intentionally Left Blank

YANMAR EMISSION CONTROL SYSTEM WARRANTY STATEMENT

YOUR WARRANTY RIGHTS AND OBLIGATIONS:

Yanmar Co., Ltd. (Yanmar) is pleased to explain emission control system warranty on your 2017, 2018 or 2019 model year marine compression-ignition (CI) engine. New marine CI engines must be designed, built and equipped to meet stringent anti-smog standards. Yanmar must warrant the emission control system on your marine CI engine for the periods of time listed below provided there has been no abuse, neglect or improper maintenance of your engine.

Your emission control system may include parts such as the fuel injection system, the air induction system and other emission-related assemblies.

Where a warrantable condition exists, Yanmar will repair your marine CI engine at no cost to you including diagnosis, parts and labor.

Yanmar's warranty coverage:

The 2017, 2018 or 2019 model year marine CI engines are warranted for a period of five (5) years or 3000 hours of operation, whichever occurs first, for all engines rated at 19kW and greater, and for a period of two and a half (2.5) years or 1500 hours of operation, whichever occurs first, for all engines rated less than 19kW, and for constant-speed engines rated under 37kW with rated speeds higher than or equal to 3000 rpm.

Engine Model	Warranty Period
2YM15, 3YM20 (kW < 19)	**30 months or 1,500 hours** of use, whichever comes first.
3YM30AE (19 ≤ kW < 37)	**60 months or 3,000 hours** of use, whichever comes first.

If any emission-related part on your marine CI engine is found to be defective during the applicable warranty period, the part will be replaced by Yanmar.

When a measurement device of use hours is not equipped, warranties apply a period of use months.

This warranty is transferable to each subsequent purchaser for the duration of the warranty period. Yanmar recommends that repair or replacement of any warranted parts be performed at an authorized Yanmar dealer or distributor.

Warranted parts not scheduled for replacement as required maintenance in the *Operation Manual* shall be warranted for the warranty period. Warranted parts scheduled for replacement as required maintenance in the operation manual are warranted for the period of time prior to the first scheduled replacement. Any part repaired or replaced under warranty shall be warranted for the remaining warranty period.

During the warranty period, Yanmar is liable for damages to other engine components caused by the failure of any warranted part during the warranty period.

Any replacement part which is functionally identical to the original equipment part in all respects may be used in the maintenance or repair of your engine, and shall not reduce Yanmar's warranty obligations. Add-on or modified parts that are not exempted may not be used. The use of any non-exempted add-on or modified parts shall be grounds for disallowing a warranty.

Warranted Parts:

This warranty covers engine components that are a part of the emission control system of the engine as delivered by Yanmar to the original retail purchaser. Such components may include the following:

- Fuel Injection System
- Intake Manifold
- Exhaust Manifold
- Positive Crankcase Ventilation (PCV) System

Since emissions-related parts may vary slightly between models, certain models may not contain all of these parts and other models may contain the functional equivalents.

Exclusions:

Failures other than those arising from defects in material and / or workmanship are not covered by this warranty. The warranty does not extend to the following: malfunctions caused by abuse, misuse, improper adjustment, modification, alteration, tampering, disconnection, improper or inadequate maintenance or use of non-recommended fuels and lubricating oils; accident-caused damage, and replacement of expendable items made in connection with scheduled maintenance. Yanmar disclaims any responsibility for incidental or consequential damages such as loss of time, inconvenience, loss of use of equipment / engine or commercial loss.

Owners Warranty Responsibilities:

- As the marine CI engine owner, you are responsible for the performance of the required maintenance listed in your operation manual. Yanmar recommends that you retain all receipts covering maintenance on your marine CI engine, but Yanmar cannot deny warranty solely for the lack of receipts or for your failure to ensure the performance of all scheduled maintenance.
- Your marine CI engine is designed to operate on diesel fuel only. Use of any other fuel may result in your marine CI engine no longer operating in compliance with applicable emission requirements.
- You are responsible for initiating the warranty process. You are responsible for presenting your marine engine to an authorized Yanmar dealer or distributor as soon as a problem exists.

Customer Assistance:

If you have any questions regarding your warranty rights and responsibilities or would like information on the nearest authorized Yanmar dealer or distributor, you should consult Yanmar America Corporation for assistance.

Yanmar America Corporation
Toll free telephone:
1-855-416-7091 or 1-800-872-2867
E-mail: CS_support@yanmar.com
Website: us.yanmar.com

Maintenance Log

Date	Operating Hours	Maintenance Performed	Dealer Name	Stamp or Signature

Date	Operating Hours	Maintenance Performed	Dealer Name	Stamp or Signature

Declaration of Conformity for Recreational Craft Propulsion Engines (inboard engines and stern drive engines without integral exhaust) with the requirements of Directive 2013/53/EU

(To be completed by manufacturer or, if mandated, authorised representative)

Name of engine manufacturer: Yanmar Co., Ltd.

Address: 1-32, Chayamachi, Kita-ku, Osaka

Town: **Post Code:** 530-8311 **Country:** Japan

Name of Authorised Representative: Yanmar Marine International B.V.

Address: Brugplein 11

Town: Almere **Post Code:** 1332 BS **Country:** the Netherlands

Name of Notified Body for exhaust emission assessment: Société Nationale de Certification et d'Homologation

Address: 11, route de Luxembourg

Town: Sandweiler **Post Code:** L-5230 **Country:** Luxembourg **ID Number**:0499

Conformity assessment module used for exhaust emissions: ☐ **B+C/C1** ☒ **B+D** ☐ **B+E** ☐ **B+F** ☐ **G** ☐ **H**

or engine type-approved according to: ☐ **Directive 97/68/EC** ☐ **EC Regulation No 595/2009**

Other Community Directives applied: **2014/30/EU**

DESCRIPTION OF ENGINE TYPE(s)

Main Propulsion ExhaustType:
- ☐ With integral exhaust
- ☒ Without integral exhaust

Combustion Type:
- ☒ Internal combustion, Diesel (CI)
- ☐ Internal combustion, Petrol (SI)
- ☐ Other

Combustion cycle:
- ☐ 2 stroke
- ☒ 4 stroke

IDENTIFICATION OF ENGINE(S) COVERED BY THIS DECLARATION OF CONFORMITY

Name of engine model or engine family:	Unique engine identification number(s) or engine family code(s)	EC Type–examination certificate or type-approval certificate number
		SNCH*2013/53*2013/53*
Engine family: RCD2-2YM15X1 Engine models: 2YM15, 3YM20		0049*00
Engine family: RCD2-3YM30X1 Engine models: 3YM30AE		0052*00
Engine family: RCD2-3JH5X1 Engine models: 3JH5E, 3JH5AE		0059*00
Engine family: RCD2-4JH57X1 Engine models: 4JH57, 4JH45		0055*00
Engine family: RCD2-4JH11X1 Engine models: 4JH110, 4JH80		0050*00
Engine family: RCD2-3JH40X1 Engine models: 3JH40		0102*00

This declaration of conformity is issued under the sole responsibility of the manufacturer. I declare on behalf of the manufacturer that the recreational craft propulsion engine(s) mentioned above fulfil(s) the requirements specified in Article 4 (1) and Annex I of Directive 2013/53/EU.

Name / function: Shiori Nagata, President
(identification of the person empowered to sign on behalf of the engine manufacturer or his authorised representative)

Signature and title: President
(or an equivalent marking)

Date and place of issue: (yy/mm/dd) 17/06/06, **Yanmar Marine International B.V.**

Essential requirements (reference to relevant articles in Annex IB & IC of the Directive)	**Harmonised standards** Full Application	**Harmonised standards** Partial application, see tech. file	**Other reference documents** [1] Full Application	**Other reference documents** Partial Application , see tech. file	**Other proof of conformity** See technical file	**Specify the harmonised [2] standards or other reference documents used** *(with year of publication like "EN ISO 8666:2002")*
	Tick only one box per line					***All lines right of ticked boxes must be filled in***
Annex I.A - Design and Construction of products						
Inboard Engine (Annex I A. 5.1.1)	☐	☐	☐	☐	☐	
Ventilation (Annex I A.5.1.2)	☐	☐	☐	☐	☐	
Exposed parts (Annex I A.5.1.3)	☐	☐	☐	☐	☐	
Fuel system - General (Annex I A.5.2.1)	☐	☐	☐	☐	☐	
Electrical System (Annex I A.5.3)	☐	☐	☐	☐	☐	
Steering System (Annex I A.5.4)	☐	☐	☐	☐	☐	
Fire protection - General (Annex I A.5.6.1)	☐	☐	☐	☐	☐	
Discharge prevention (Annex I A.5.8)	☐	☐	☐	☐	☐	
Annex I.B – Exhaust Emissions						
Propulsion Engine Identification (Annex I B.1)	☐	☐	☐	☐	☐	
Exhaust Emission Requirements (Annex I B. 2)	☒	☐	☐	☐	☐	EN ISO 18854: 2015
Durability (Annex I B.3)	☐	☐	☐	☐	☐	
Owner's manual (Annex I B.4)	☐	☐	☐	☐	☐	
Annex I.C – Noise Emissions	See Declaration of Conformity of the recreational craft in which the engine(s) has (have) been installed					

[1] Such as non-harmonised standards, rules, regulations, guidelines, etc.
[2] Standards published in EU Official Journal

This Page Intentionally Left Blank

YANMAR CO., LTD.

■**Large Power Products Management Division**

Quality Assurance Division

5-3-1, Tsukaguchi-honmachi, Amagasaki
Hyogo, 661-0001, Japan
Phone: +81-6-6428-3137 Fax: +81-6-6421-5549
https://www.yanmar.com/

■**Yanmar Marine International B.V.**

Brugplein 11, 1332 BS Almere-de Vaart, Netherlands
Phone: +31-36-5493534 Fax: +31-36-5493219
http://www.yanmarmarine.com/

Overseas Office

■**Yanmar Europe B.V. (YEU)**

Brugplein 11, 1332 BS Almere-de Vaart, Netherlands
Phone: +31-36-5493200 Fax: +31-36-5493209
http://www.yanmar.com/eu/

■**Yanmar Asia (Singapore) Corporation Pte. Ltd. (YASC)**

4 Tuas Lane, Singapore 638613
Phone: +65-6861-3855 Fax: +65-6862-5189
https://www.yanmar.com/sg/

■**Yanmar America Corporation (YA)**

101 International Parkway,
Adairsville, GA 30103, U.S.A.
Phone: +1-770-877-9894 Fax: +1-770-877-9009
http://www.yanmar.com/us/

■**Yanmar Engine (Shanghai) Co., Ltd.**

10F, E-Block Poly Plaza, No.18 Dongfang Road,
Pudong Shanghai, China P.R.C. 200120
Phone: +86-21-6880-5090 Fax: +86-21-6880-8090
https://www.yanmar.com/cn/

As of November 1st, 2017

OPERATION MANUAL

2YM15, 3YM20, 3YM30AE

1st edition: November 2007
5th edition: February 2015
6th edition: January 2017
7th edition: November 2017
8th edition: May 2018

Issued by: YANMAR CO., LTD. Large Power Products Management Division

Edited by: YANMAR TECHNICAL SERVICE CO., LTD.

YANMAR

YANMAR CO., LTD.

https://www.yanmar.com

0AYMM-EN0027
30.5(YTSK)